# the benefits of separators

The PALMER range of separators are designed to automatically remove air and dirt from heating cooling and process systems, ensuring optimum performance of your equipment at all times. These should be installed in all new buildings and can be retro-fitted into existing systems, to provide economic and environmental benefits.

Separators should be installed in any sizable open or closed loop system, including chilled water systems, condenser water systems, and process water systems.

We offer six different standard configurations to ensure we can provide the best solution for your application.

**1) Air and Dirt Separator:** Combined units used in pipelines to efficiently remove air, micro bubbles and particles.

**2) Air and Dirt Separator with removable element:** Removable flange to facilitate easy cleaning and maintenance.

**3) Dirt Separator:** Used in pipelines to remove impurities and particles.

**4) Dirt Separator with removable element:** Removable flange to facilitate easy cleaning and maintenance.

**5) Air Separator:** Used in pipelines to remove air and micro bubbles.

**6) Balancing Tank with Air and Dirt Separator:** A combination of the above units, plus facilitating proper mixing to keep the flow in the boiler and distribution circuits the same, providing optimum hydraulic balance.

- All units are designed and manufactured in accordance with Pressure Equipment Directive 97/23/EC, 1997.
- Larger units up to DN600 are available to order.

| Separator Specification | |
|---|---|
| Body | Carbon Steel - ST17 |
| Connections | Standard: Flanged PN16<br>Other versions available to order |
| Max. Working Temperature | 110°C |
| Max Working Pressure | 10 Bar |
| Internal Element | AISI 304 Stanless Steel |

| Air Vent Specification | |
|---|---|
| Body | Brass |
| Connections | Screwed |
| Max. Working Temperature | 110°C |
| Max Working Pressure | 10 Bar |
| Float | Polypropylene |

**T:** 01737 826638 **F:** 01737 764646 **E:** sales@palmer.uk.com **W:** www.palmer.uk.com

# air and dirt separators

## air and dirt separator

| CODE | SIZE | WEIGHT |
|---|---|---|
| ADS2F | DN50 | 17 kg |
| ADS212F | DN65 | 18 kg |
| ADS3F | DN80 | 38 kg |
| ADS4F | DN100 | 40 kg |
| ADS5F | DN125 | 62 kg |
| ADS6F | DN150 | 67 kg |
| ADS8F | DN200 | 150 kg |
| ADS10F | DN250 | 300 kg |
| ADS12F | DN300 | 545 kg |

## air and dirt separator de-mountable

| CODE | SIZE | WEIGHT |
|---|---|---|
| ADSM2F | DN50 | 37 kg |
| ADSM212F | DN65 | 38 kg |
| ADSM3F | DN80 | 61 kg |
| ADSM4F | DN100 | 63 kg |
| ADSM5F | DN125 | 102 kg |
| ADSM6F | DN150 | 107 kg |
| ADSM8F | DN200 | 207 kg |
| ADSM10F | DN250 | 373 kg |
| ADSM12F | DN300 | 624 kg |

## dirt separator

| CODE | SIZE | WEIGHT |
|---|---|---|
| DS2F | DN50 | 15 kg |
| DS212F | DN65 | 16 kg |
| DS3F | DN80 | 28 kg |
| DS4F | DN100 | 30 kg |
| DS5F | DN125 | 62 kg |
| DS6F | DN150 | 65 kg |
| DS8F | DN200 | 120 kg |
| DS10F | DN250 | 230 kg |
| DS12F | DN300 | 400 kg |

## dirt separator de-mountable

| CODE | SIZE | WEIGHT |
|---|---|---|
| DSDM2F | DN50 | 35 kg |
| DSDM212F | DN65 | 36 kg |
| DSDM3F | DN80 | 51 kg |
| DSDM4F | DN100 | 53 kg |
| DSDM5F | DN125 | 102 kg |
| DSDM6F | DN150 | 105 kg |
| DSDM8F | DN200 | 177 kg |
| DSDM10F | DN250 | 303 kg |
| DSDM12F | DN300 | 479 kg |

## air separator

| CODE | SIZE | WEIGHT |
|---|---|---|
| AS2F | DN50 | 15 kg |
| AS212F | DN65 | 16 kg |
| AS3F | DN80 | 28 kg |
| AS4F | DN100 | 30 kg |
| AS5F | DN125 | 62 kg |
| AS6F | DN150 | 65 kg |
| AS8F | DN200 | 120 kg |
| AS10F | DN250 | 230 kg |
| AS12F | DN300 | 400 kg |

## Hydraulic balance with air and dirt separator

| CODE | SIZE | WEIGHT |
|---|---|---|
| ADS2F | DN50 | 17 kg |
| ADS212F | DN65 | 18 kg |
| ADS3F | DN80 | 38 kg |
| ADS4F | DN100 | 40 kg |
| ADS5F | DN125 | 62 kg |
| ADS6F | DN150 | 67 kg |
| ADS8F | DN200 | 150 kg |
| ADS10F | DN250 | 300 kg |
| ADS12F | DN300 | 545 kg |

## air vent valve

The automatic air went is included with the separators and is also available as a separate unit. The high flow vent will efficiently and quickly remove large amounts of air that would otherwise get trapped in the high points or dead ends of pipework.

| CODE | SIZE | WEIGHT |
|---|---|---|
| AVV12 | ½" BSPF | 1 kg |

**T:** 01737 826638 **F:** 01737 764646 **E:** sales@palmer.uk.com **W:** www.palmer.uk.com

# the benefits of dirt separators

During fabrication and installation of a new system there will be a build-up of dirt and once the system is in operation there will be an accumulation of scale and particles from corrosion caused by entrained air.

**BENEFITS OF INSTALLING A DIRT SEPARATOR:**

- More cost effective systems
- Longer life-span of pumps and other equipment
- Save time and money on commissioning and bleeding the system
- Reduce water losses from flushing
- Energy savings
- Reduce emissions
- Reduce carbon footprint
- Reduce wastage of chemicals (removing dirt makes the chemicals more effective)
- Reduce system noise
- Lower maintenance costs
- Dirt can be discharged while the system is in operation
- No shut off values o bypass are required
- Cleaning only takes seconds

**T:** 01737 826638 **F:** 01737 764646 **E:** sales@palmer.uk.com **W:** www.palmer.uk.com

# the benefits of air separators

Air is always present before filling a system. When the system gets filled this air then gets trapped within it. Unless this air is removed, this will result in inefficient system operation and causes high maintenance costs.

**SOME OF THE MANY BENEFITS INCLUDE:**

- Reduced noise in radiators, heat exchangers, pipework and pumps
- Decreased wear and tear of heat exchangers, controllers, shut-off valves and pumps
- Greater heat emissions or cooling efficiency
- Energy savings
- Greatly reduces manual venting times
- Lower maintenance costs
- Less system corrosion

Figure 1

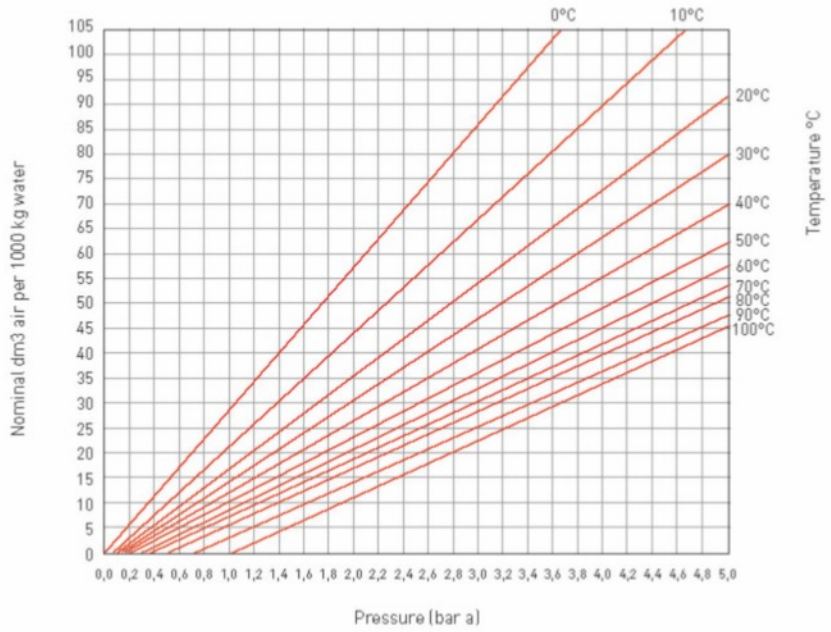


**AIR IN HEATING SYSTEMS**

The amount of air which is dissolved in water is dependent on both temperature and pressure within the system. As temperature rises or pressure falls, air that is dissolved in the water is released (Figure1).

During boiler operation micro bubbles are released continuously. When high temperatures occur at the combustion chamber wall of the boiler, micro bubbles are released in the water. Micro bubbles should be removed immediately upon leaving the boiler to experience the benefits listed above.

**AIR IN COOLING SYSTEMS**

In a cooling system it is a reduction in system pressure that mostly causes the formation of air bubbles. Also, when the temperature of the water in the coil is reduced, some of the air bubbles will dissolve into the water. To prevent cavitation damage to the pump these air bubbles should be released from the system as early in the system as possible.

**T:** 01737 826638 **F:** 01737 764646 **E:** sales@palmer.uk.com **W:** www.palmer.uk.com

Air & dirt separators should be used in both heating and cooling systems. For optimum results, the flow velocity should be less than 1.5 metres / second. If the flow velocity is above 1.5m/s, the separators' efficiency will be reduced.

The following two installation examples may help in selecting the correct size unit (Figure 1):

**1. If the separator is installed in a low pressure, high temperature situation, the velocity should be 1.5m/s.**

- On the 'Flow' axis at point A (70m3/hr), move vertically to point B on the 1.5m/s water velocity curve.
- Move left from point B to point D on the 'Dimensions' axis.
- Choose the nearest dimension that is higher than point D. In this example you would select DN125.

**2. If the separator is installed in a high pressure, high temperature situation, for example in a basement, the velocity should be 1m/s.**

- On the 'Flow' axis at point A (70m3/hr), move vertically to point B on the 1m/s water velocity curve
- Move left from point C to point E on the 'Dimensions' axis.
- Choose the nearest dimension that is higher than point D. In this example you would select DN150.

Figure 1

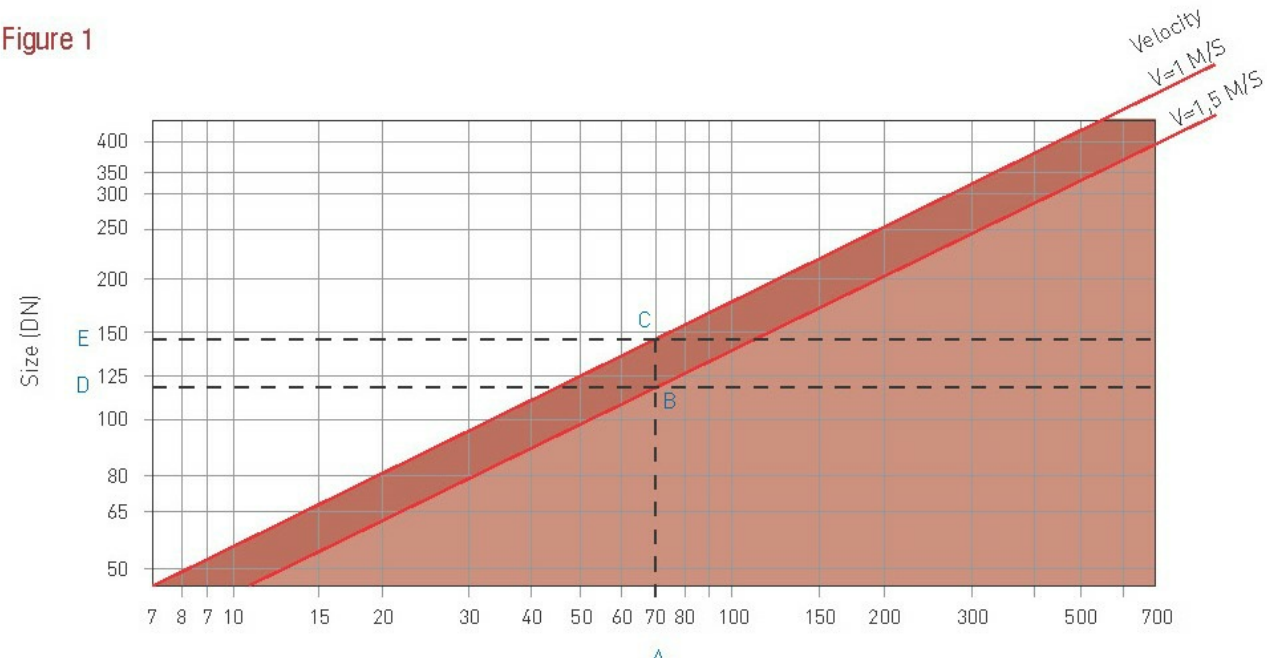

**Use the chart below to determine the pressure across your chosen separator:**

**Pressure loss example:**
When the water flow is 70m3/hr, the pressure loss for the DN150 dirt and air separator is 1kPa.

- On the 'Flow' axis at point A (70m3/hr), move vertically to point B on the DN150 line.
- Move left from point B to point C on the 'pressure loss' axis. In this example the pressure loss would be 1kPa.

Figure 2

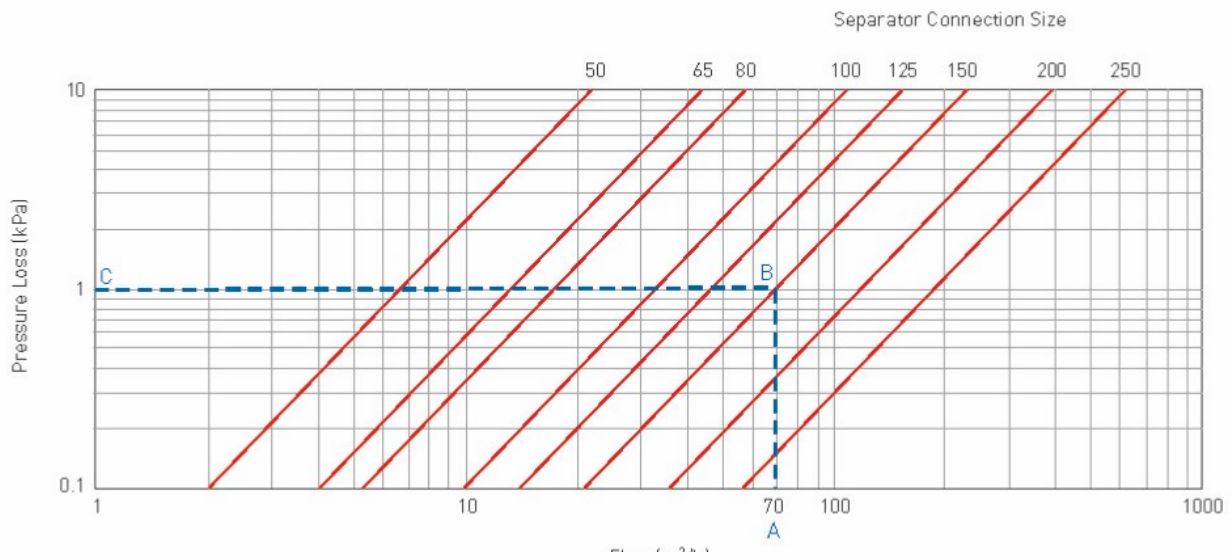

ADS

## ADS

Combined air and dirt separators can be used instead of individual deaerators and dirt separators. These combined units are very efficient and extremely cost effective, becoming the preferred standard option throughout the industry. In heating systems, the units should be installed in the flow loop, situated immediately after the boiler and prior to the pump. In a chilled water system the unit must be located in the return loop close to the chiller.

## ASDSDM

The static head must not exceed 15 metres for a heating system and 5 metres for a cooling system. The efficiency of the unit will be reduced if: •

- System static head exceeds 15 metres.
- System flow velocity exceeds 1.5m/second.

ASDSDM De-mountable

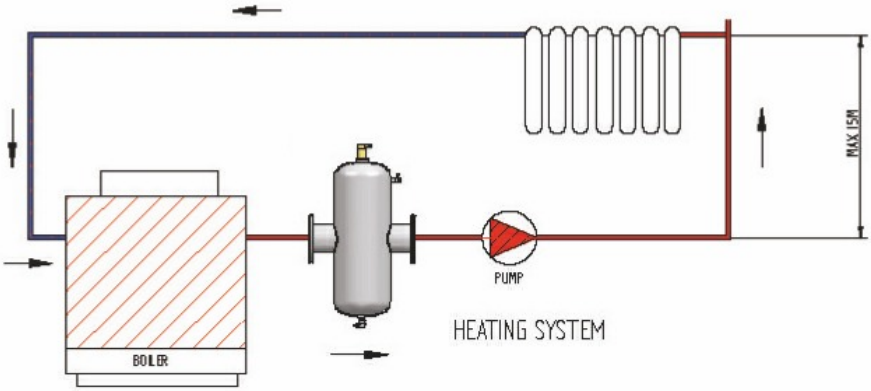


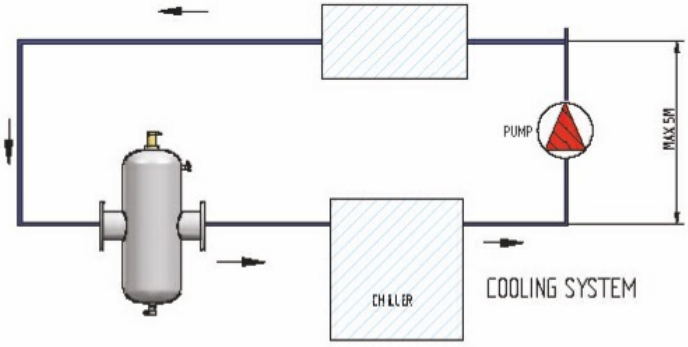

## ADS air & dirt separator

Pipework connection PN16. Other special order versions available on request.

| MODEL | DN (mm) | OD (mm) | A (mm) | B (mm) | C (inch) | H (mm) | FLOW (m ³/h @ 1m/sV | VOL. (Litres) | WEIGHT (Kg) |
|---|---|---|---|---|---|---|---|---|---|
| ADS2 | 50 | 60 | 265 | 350 | 1" | 630 | 8 | 7 | 17 |
| ADS212 | 65 | 76 | 265 | 350 | 1" | 630 | 15 | 7 | 18 |
| ADS3 | 80 | 88 | 345 | 470 | 1" | 790 | 20 | 25 | 38 |
| ADS4 | 100 | 114 | 345 | 475 | 1" | 790 | 30 | 25 | 40 |
| ADS5 | 125 | 139 | 480 | 635 | 1" | 1050 | 50 | 75 | 62 |
| ADS6 | 150 | 168 | 480 | 635 | 1" | 1050 | 75 | 75 | 67 |
| ADS8 | 200 | 219 | 615 | 775 | 1" | 1320 | 125 | 150 | 150 |
| ADS10 | 250 | 273 | 815 | 890 | 2" | 1720 | 200 | 300 | 300 |
| ADS12 | 300 | 323 | 970 | 1005 | 2" | 2020 | 275 | 500 | 545 |

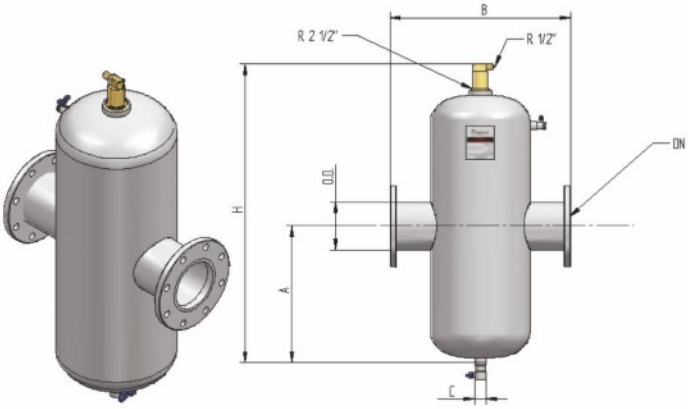


## ASDSDM air & dirt separator de-mountable

Pipework connection PN16. Other special order versions available on request.

| MODEL | DD (mm) | OD (mm) | A (mm) | B (mm) | C (inch) | H (mm) | FLOW (m ³/h @ 1m/sV | VOL. (Litres) | WEIGHT (Kg) |
|---|---|---|---|---|---|---|---|---|---|
| ASDSDM2 | 50 | 60 | 265 | 350 | 1" | 630 | 8 | 7 | 17 |
| ASDSDM212 | 65 | 76 | 265 | 350 | 1" | 630 | 15 | 7 | 18 |
| ASDSDM3 | 80 | 88 | 345 | 470 | 1" | 790 | 20 | 25 | 38 |
| ASDSDM4 | 100 | 114 | 345 | 475 | 1" | 790 | 30 | 25 | 40 |
| ASDSDM5 | 125 | 139 | 480 | 635 | 1" | 1050 | 50 | 75 | 62 |
| ASDSDM6 | 150 | 168 | 480 | 635 | 1" | 1050 | 75 | 75 | 67 |
| ASDSDM8 | 200 | 219 | 615 | 775 | 1" | 1320 | 125 | 150 | 150 |
| ASDSDM10 | 250 | 273 | 815 | 890 | 2" | 1720 | 200 | 300 | 300 |
| ASDSDM12 | 300 | 323 | 970 | 1005 | 2" | 2020 | 275 | 500 | 545 |

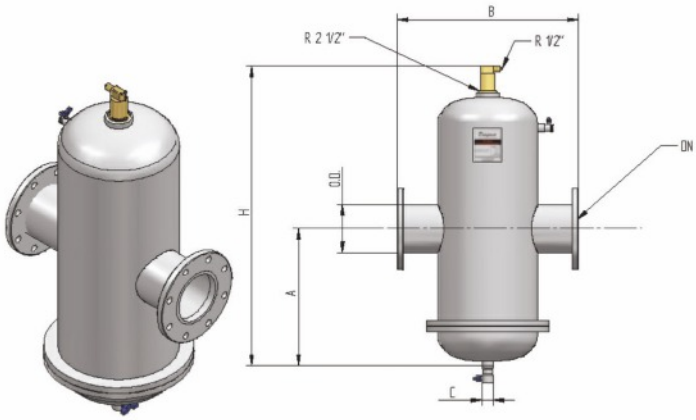

# dirt separators

Dirt separators are designed to remove impurities and particles. These units should always be installed in systems before equipment that requires protection from dirt and sludge, such as boilers, chillers, control valves and pumps. In heating systems this should be in the return loop close to the boiler. In a chilled water system the unit should be located in the return loop close to the chiller. Periodic draining of the CXP unit will keep the system free of impurities, prolonging the life of other installed equipment.

The static head must not exceed 15 metres for a heating system and 5 metres for a cooling system. The efficiency of the unit will be reduced if:

- System static head exceeds 15 metres.
- System flow velocity exceeds 1.5m/second.

De-mountable

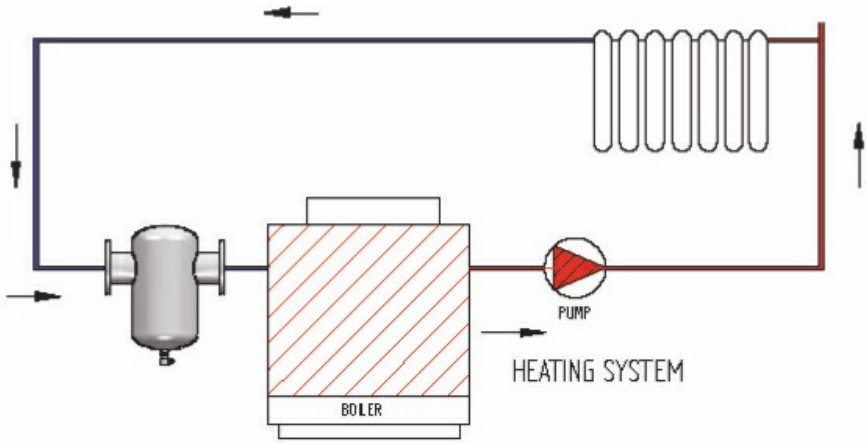


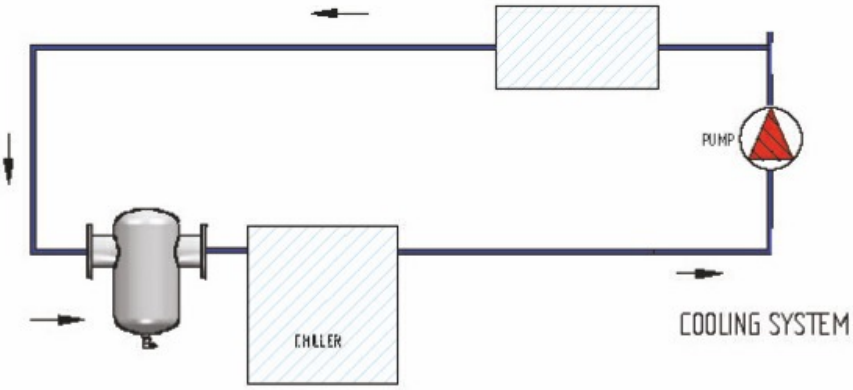


**T:** 01737 826638 **F:** 01737 764646 **E:** sales@palmer.uk.com **W:** www.palmer.uk.com

## DS MODEL dirt separator

Pipework connection PN16.

| MODEL | DD (mm) | OD (mm) | A (mm) | B (mm) | C (inch) | H (mm) | FLOW (m ³/h @ 1m/sV | VOL. (Litres) | WEIGHT (Kg) |
|---|---|---|---|---|---|---|---|---|---|
| DS2 | 50 | 60 | 270 | 350 | 1” | 395 | 8 | 5 | 15 |
| DS212 | 65 | 76 | 260 | 350 | 1” | 395 | 15 | 5 | 16 |
| DS3 | 80 | 88 | 355 | 470 | 1” | 515 | 20 | 17 | 28 |
| DS4 | 100 | 114 | 345 | 475 | 1” | 515 | 30 | 17 | 30 |
| DS5 | 125 | 139 | 475 | 635 | 1” | 690 | 50 | 50 | 62 |
| DS6 | 150 | 168 | 460 | 635 | 1” | 690 | 75 | 50 | 65 |
| DS8 | 200 | 219 | 615 | 775 | 1” | 900 | 125 | 100 | 120 |
| DS10 | 250 | 273 | 800 | 890 | 2” | 1145 | 200 | 200 | 230 |
| DS12 | 300 | 323 | 955 | 1005 | 2” | 1360 | 275 | 363 | 400 |

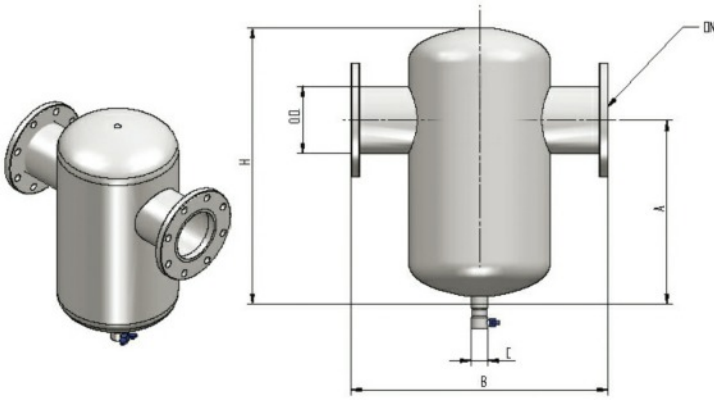


## DS MODEL dirt separator de-mountable

Pipework connection PN16. Other special order versions available on request.

| MODEL | DD (mm) | OD (mm) | A (mm) | B (mm) | C (inch) | H (mm) | FLOW (m ³/h @ 1m/sV | VOL. (Litres) | WEIGHT (Kg) |
|---|---|---|---|---|---|---|---|---|---|
| DSDM2 | 50 | 60 | 270 | 350 | 1” | 395 | 8 | 5 | 35 |
| DSDM212 | 65 | 76 | 260 | 350 | 1” | 395 | 15 | 5 | 36 |
| DSDM3 | 80 | 88 | 355 | 470 | 1” | 515 | 20 | 17 | 51 |
| DSDM4 | 100 | 114 | 345 | 475 | 1” | 515 | 30 | 17 | 53 |
| DSDM5 | 125 | 139 | 475 | 635 | 1” | 690 | 50 | 50 | 102 |
| DSDM6 | 150 | 168 | 460 | 635 | 1” | 690 | 75 | 50 | 105 |
| DSDM8 | 200 | 219 | 615 | 775 | 1” | 900 | 125 | 100 | 177 |
| DSDM10 | 250 | 273 | 800 | 890 | 2” | 1145 | 200 | 200 | 303 |
| DSDM12 | 300 | 323 | 955 | 1005 | 2” | 1360 | 275 | 363 | 479 |

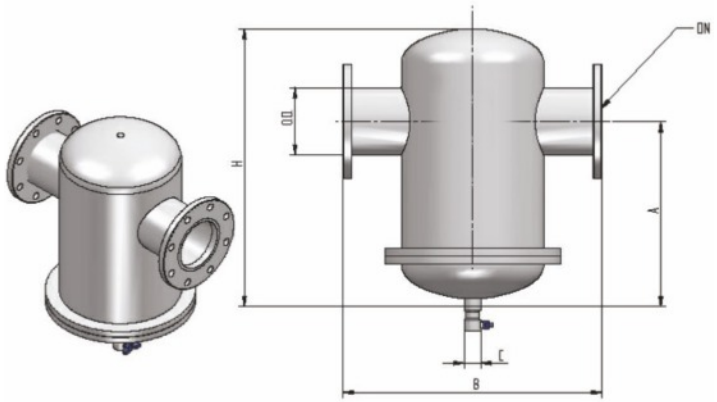

# air separators

Palmer air separator units are installed to efficiently remove air and micro bubbles from the system. In heating systems, an air separator should be installed in the flow loop where the system experiences the highest temperature (next to the heat source) and lowest pressure. Air separators should ideally be installed immediately after the boiler and prior to the pump suction port as this is where the formation of micro bubbles is greatest. In a chilled water system the unit must be located in the return loop just prior to the chiller.

The static head must not exceed 15 metres for a heating system and 5 metres for a cooling system. The efficiency of the unit will be reduced if:

- System static head exceeds 15 metres.
- System flow velocity exceeds 1.5m/second.

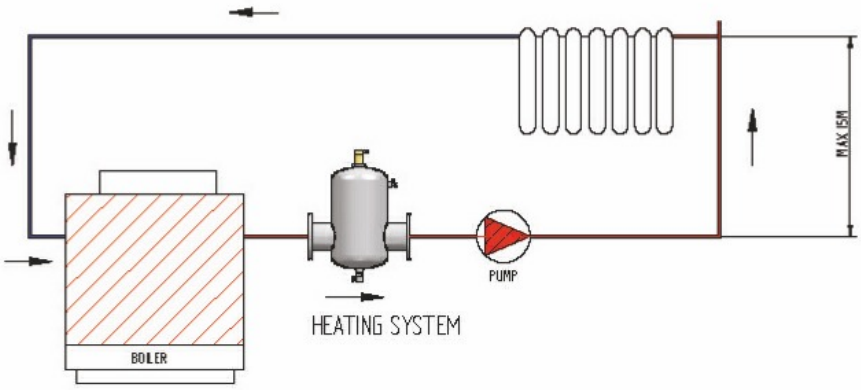


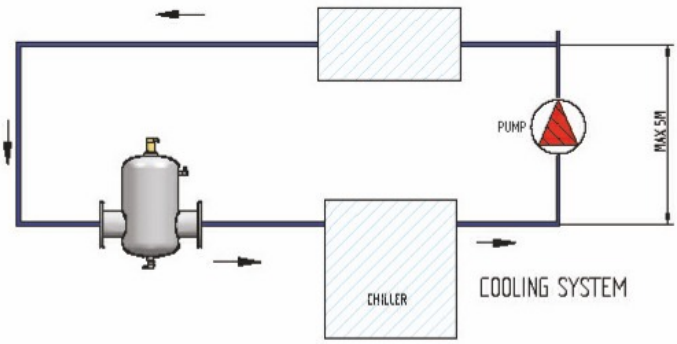


**T:** 01737 826638 **F:** 01737 764646 **E:** sales@palmer.uk.com **W:** www.palmer.uk.com

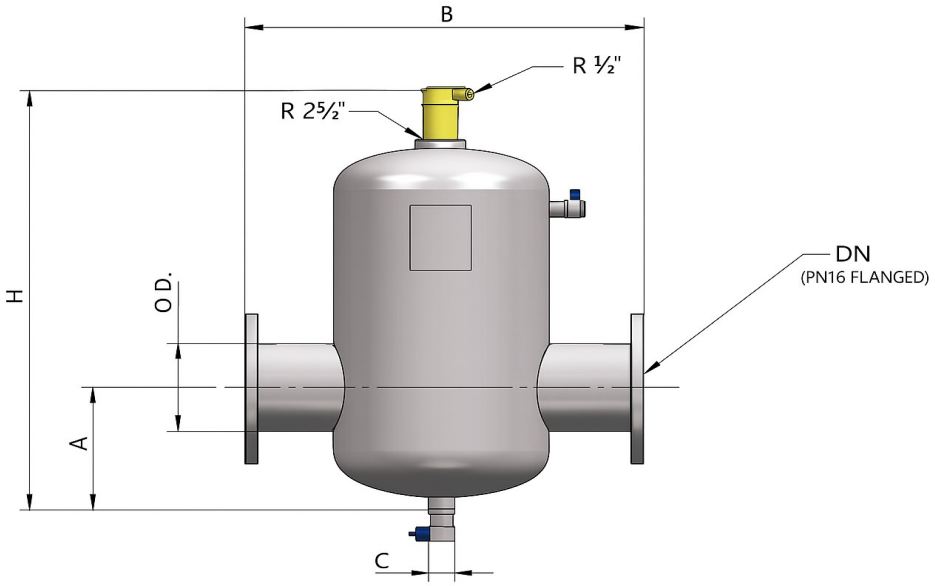


| Model No. | Flow Rate ($m^3/h$) | Volume (litres) | Weight (kg) | DN (mm) | OD (mm) | A (mm) | B (mm) | C (inches) | H (mm) |
|---|---|---|---|---|---|---|---|---|---|
| AS2F | 8 | 5 | 15 | 50 | 60 | 138 | 350 | ½" | 482 |
| AS212F | 15 | 15 | 16 | 65 | 76 | 138 | 350 | ½" | 482 |
| AS3F | 20 | 17 | 18 | 80 | 88 | 177 | 470 | ½" | 607 |
| AS4F | 30 | 17 | 20 | 100 | 114 | 177 | 475 | ½" | 607 |
| AS5F | 45 | 30 | 25 | 125 | 140 | 198 | 605 | ½" | 757 |
| AS6F | 75 | 50 | 65 | 150 | 168 | 267 | 635 | ¾" | 797 |
| AS8F | 125 | 100 | 120 | 200 | 219 | 267 | 797 | 1" | 1045 |
| AS10F | 200 | 210 | 230 | 250 | 273 | 347 | 890 | 1" | 1227 |
| AS12F | 275 | 360 | 400 | 300 | 323 | 385 | 1005 | 1" | 1247 |

# Palmer hydraulic balance air and dirt separators

This unit combines the benefits of a deaerator, a dirt separator and a hydraulic balancing tank in one unit. This can be used instead of an individual deaerator and dirt separator, incorporating the added advantage of creating a perfect hydraulic balance between the primary and secondary circuits.

The importance of having a well-balanced system cannot be over-emphasised, as this greatly reduces energy consumption and increases boiler or chiller efficiency. It is vastly more cost effective to purchase this combined unit rather than individual items - saving both initial cost and time on installation.

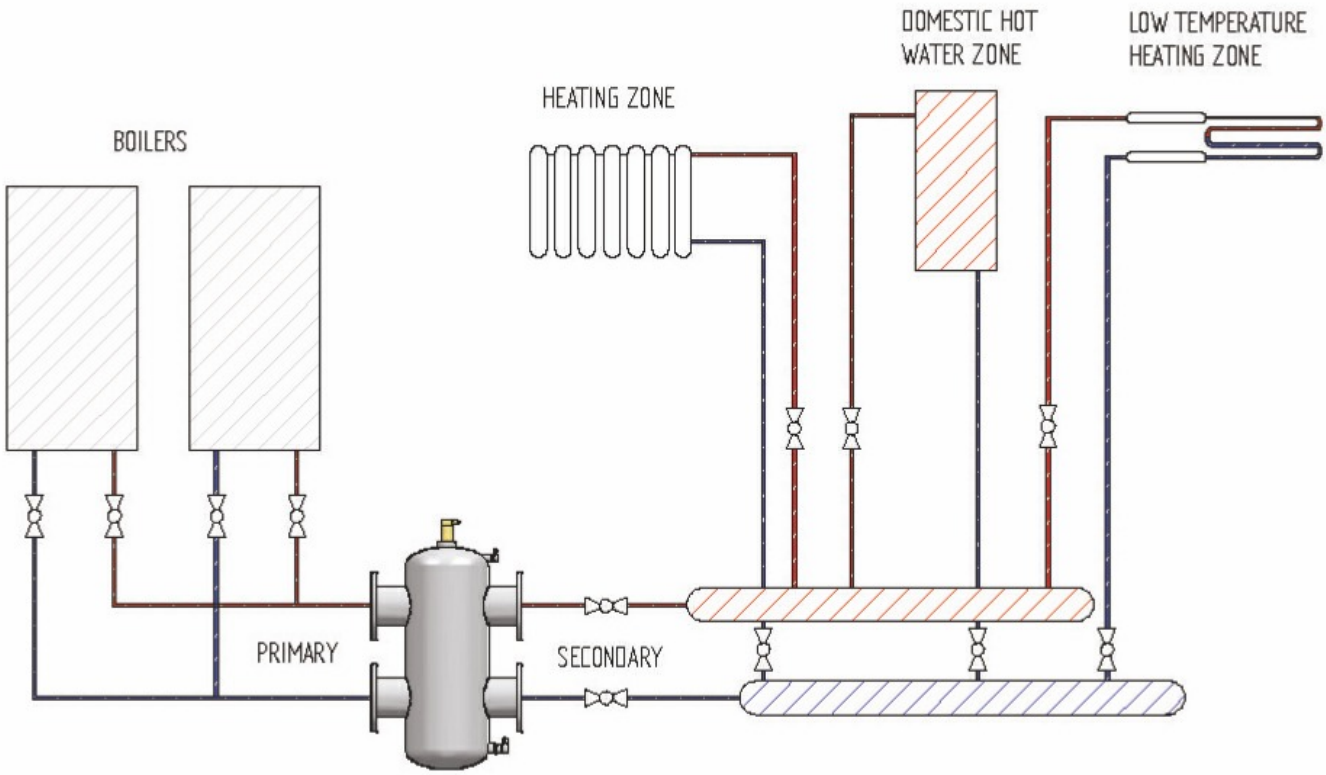


**T:** 01737 826638 **F:** 01737 764646 **E:** sales@palmer.uk.com **W:** www.palmer.uk.com

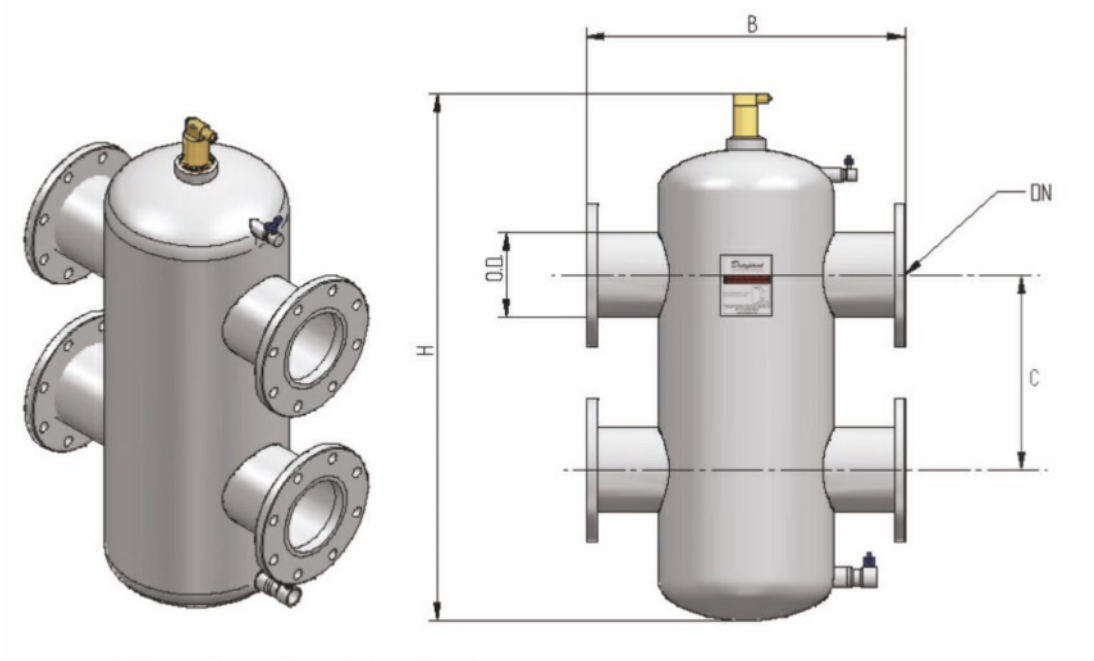


# HBAD MODEL hydraulic balancing with air and dirt separator

Pipework connections PN16.

| MODEL | DD (mm) | OD (mm) | B (mm) | C (mm) | H (mm) | FLOW (m ³/h @ 1m/sV | VOL. (Litres) | WEIGHT (Kg) |
|---|---|---|---|---|---|---|---|---|
| HBAD2 | 50 | 60 | 350 | 240 | 630 | 8 | 7 | 17 |
| HBAD12 | 65 | 76 | 350 | 305 | 630 | 15 | 7 | 18 |
| HBAD3 | 80 | 88 | 470 | 360 | 790 | 20 | 25 | 38 |
| HBAD4 | 100 | 114 | 475 | 460 | 790 | 30 | 25 | 40 |
| HBAD5 | 125 | 139 | 635 | 560 | 1050 | 50 | 75 | 62 |
| HBAD6 | 150 | 168 | 635 | 670 | 1050 | 75 | 75 | 67 |
| HBAD8 | 200 | 219 | 775 | 870 | 1320 | 125 | 150 | 150 |
| HBAD10 | 250 | 273 | 890 | 1100 | 1720 | 200 | 300 | 300 |
| HBAD12 | 300 | 323 | 1005 | 1300 | 2020 | 275 | 500 | 545 |