ART 6200 PN16

PN16 Adjustable Pressure Reducing Valve

Features

- Automatic Control Valve
- Suitable for potable water applications
- Pressure adjusted by integral pilot valve
- Conforms to BS EN558-1 Series 1
- Flange conforms to BS EN1092 PN16
- Available flanged PN25
- Stainless Steel pilot tubing and valves
- Fully WRAS Approved valve - Cert No. 2105035

WRAS APPROVED PRODUCT

Available on bimstore.co

Technical data

Max pressure: 16 Bar
Working temp: 0°C to +80°C

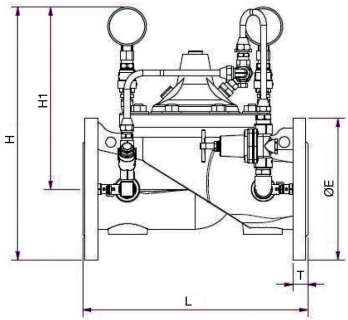

DN	50	65	80	100	125	150	200	250	300
L	230	290	310	350	400	480	600	730	850
E	165	185	200	220	250	285	340	405	460
C	125	145	160	180	210	240	295	355	410
n-Ød	4-19	4-19	8-19	8-19	8-19	8-23	12-23	12-28	12-28
B	265	300	310	320	350	385	440	505	560
H	452	462	470	483	498	513	540	573	598
H1	369	370	370	373	373	376	376	378	396
Kgs	13	17	23	30	65	69	132	315	420

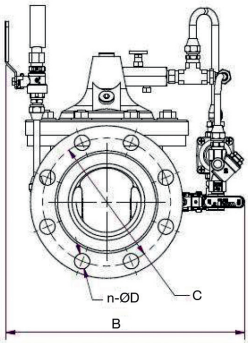

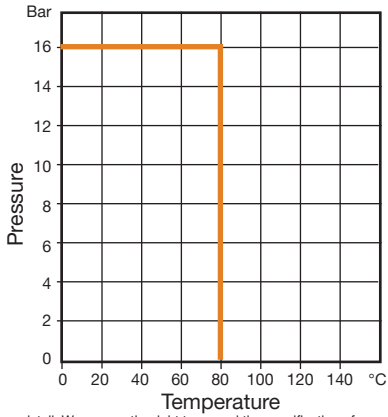

V1. Dimensions in mm

This data sheet is designed as a guide and should not be regarded as wholly accurate in every detail. We reserve the right to amend the specification of any product without notice.

ART 6200 PN16

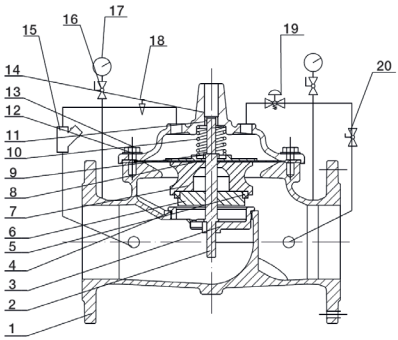

N.	Part Name	Materials
1	Body	Ductile Iron
2	Stem	Stainless Steel 304
3	Seat	Stainless Steel 304
4	O-Ring	NBR
5	Disc Ring	NBR
6	Disc Retainer	Ductile Iron
7	Disc Guide	Ductile Iron
8	Diaphragm	EPDM
9	Diaphragm Washer	Ductile Iron
10	Spring	Stainless Steel 304
11	Cover Bearing	Stainless Steel 304
12	Screw	Stainless Steel 304
13	Washer	Stainless Steel 304
14	Cover	Ductile Iron
15	Strainer	Stainless Steel 304
16	Ball Valve	Stainless Steel 304
17	Gauge	Stainless Steel 304
18	Needle Valve	Stainless Steel 304
19	Pilot Valve	Stainless Steel 304
20	Ball Valve	Stainless Steel 304

Pilot Valve Detail - ART 6250

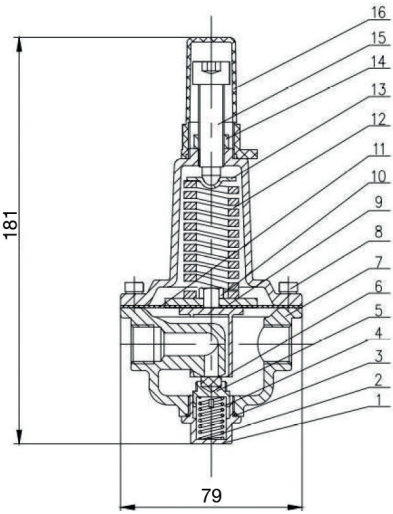

N.	Part Name	Materials
1	Plug	Stainless Steel 304
2	Spring	Stainless Steel 304
3	O-Ring	NBR
4	Seat	Stainless Steel 304
5	Disc	NBR
6	Yoke	Stainless Steel 304
7	Body	Stainless Steel 304
8	Screw	Stainless Steel 304
9	Diaphragm Washer	Stainless Steel 304
10	Nut	Stainless Steel 304
11	Diaphragm	EPDM
12	Spring	Stainless Steel 304
13	Spring Holder	Stainless Steel 304
14	Locking Nut	Stainless Steel 304
15	Adjusting Screw	Stainless Steel 304
16	Cap	ABS

Fitted with standard Pilot Valve
0.70 to 12.00 Bar (10 to 175 PSI)
Factory set to 3.5 Bar (50 PSI)

Other Pilot Valves available
1.40 to 12.00 Bar (20 to 175 PSI)
2.10 to 20.00 Bar (30 to 300 PSI)

V1. Dimensions in mm

This data sheet is designed as a guide and should not be regarded as wholly accurate in every detail. We reserve the right to amend the specification of any product without notice.

ART 6200 PN16

Cavitation Chart

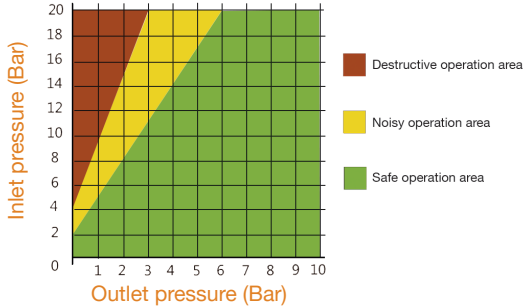

Flow Volume vs Velocity (water)

	Volume m3/h													
Size DN	**0.4 m/s**	**0.6 m/s**	**0.8 m/s**	**1.0 m/s**	**1.2 m/s**	**1.4 m/s**	**1.6 m/s**	**1.8 m/s**	**2.0 m/s**	**2.2 m/s**	**2.4 m/s**	**2.6 m/s**	**2.8 m/s**	**3.0 m/s**
50	2.8	4.2	5.7	7.1	8.5	9.9	11.3	12.7	14.1	15.6	17.0	18.4	19.8	21.2
65	4.8	7.2	9.6	11.9	14.3	16.7	19.1	21.5	23.9	26.3	28.7	31.1	33.4	35.8
80	7.2	10.9	14.5	18.1	21.7	25.3	29.0	32.6	36.2	39.8	43.4	47.0	50.7	54.3
100	11.3	17.0	22.6	28.3	33.9	39.6	45.2	50.9	56.5	62.2	67.9	73.5	79.2	84.8
125	17.7	26.5	35.3	44.2	53.0	61.9	70.7	79.5	88.4	97.2	106.0	114.9	123.7	132.5
150	25.4	38.2	50.9	63.6	76.3	89.1	101.8	114.5	127.2	140.0	152.7	165.4	178.1	190.9
200	45.2	67.9	90.5	113.1	135.7	158.3	181.0	203.6	226.2	248.8	271.4	294.1	316.7	339.3
250	70.7	106.0	141.4	176.7	212.1	247.4	282.7	318.1	353.4	388.8	424.1	459.5	494.8	530.1
300	101.8	152.7	203.6	254.5	305.4	356.3	407.1	458.0	508.9	559.8	610.7	661.6	712.5	763.4

Note; for good pressure control within the valves optimum flow rate, the pressure reducing valve should be sized on on a velocity of 1 to 2m/s.

Flow curve of the main valve at fully open status

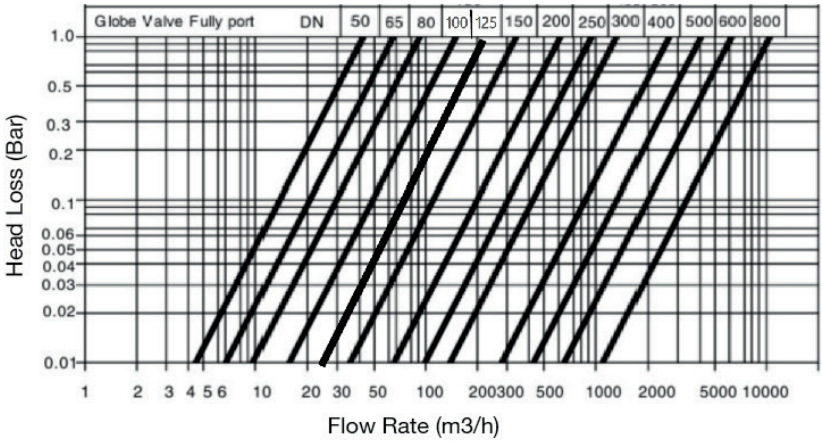

V1. Dimensions in mm

This data sheet is designed as a guide and should not be regarded as wholly accurate in every detail. We reserve the right to amend the specification of any product without notice.