ROTARY MOTORIZED VALVES

MIXING VALVE
SERIES 3F

3F, DN 20–150, cast iron, PN 6. Flange.

Flange

OPERATION
The ESBE series F is a valve made of cast iron for use in heating and cooling installations.

The mixing proportions are adjusted manually with a handle or, in automatically controlled systems, by means of an actuator. Suitable actuators are ESBE series ARA600 for DN ≤50 or series 90. The valve can alco be equipped with ESBE controllers series 90C and CRA120 or CRA110, CRB100 and CRC110 ≤DN50.

Valve series 3F is available in dimensions DN 20-150 with flanged connections.

The scale is graded on both sides and can be turned, allowing a choice of mounting positions. Operation angle = 90°.

SERVICE AND MAINTENANCE
All major parts are replaceable. The shaft seal consist two o-rings, one of which can be replaced without the need for draining down the system or dismantling the valve. However, before doing so, the system must be depressurized.

INSTALLATION EXAMPLES
All the examples of installations can be reversed. The valve position plate is graded on both sides and should at the installation be fitted in the correct position as shown in the instruction for installation.

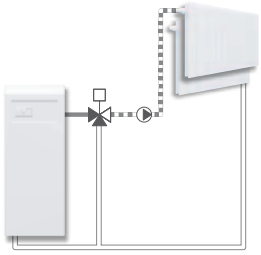

Mixing

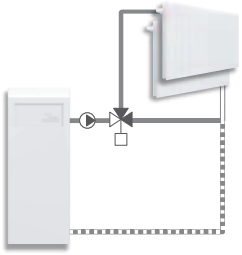

Diverting

VALVE 3F DESIGNED FOR
- ● Heating
- ● Comfort cooling
- ○ Potable water
- ○ Floor heating
- ○ Solar heating
- ○ Ventilation
- ○ Zone
- ○ District hot water
- ○ District heating
- ○ District cooling

SUITABLE ACTUATORS AND CONTROLLERS
- ● Series ARA600 ≤DN50
- ● Series 90
- ● Series 90C
- ● Series CRC110 ≤DN50
- ● Series CRB100 ≤DN50
- ● Series CRA110 ≤DN50
- ● Series CRA120

TECHNICAL DATA
Pressure class: PN 6
Media temperature: max. 110°C, min. –10°C
Differential pressure drop: DN 20–50, max. 50 kPa
DN 65–150, max. 30 kPa
Leakrate in % of flow: max. 1.5%
Rangeability Kv/Kv^{min}: 100
Connection: Flange according to EN 1092-2

Material: DN 20–25 DN 32-150
Valve body: Cast iron EN–JL 1030
Slide: brass CW 614N brass CW 614N and stainless steel
Bushing: plastic brass CW 602N
Cover plate: zinc cast iron
O-rings: EPDM

PED 97/23/EC, article 3.3

REQUIRED ACTUATOR TORQUE
The figures below are intended only as a recommendation for ordinary installations. In some applications the valve may require even more actuator torque.

Valve size up to	actuator torque
DN 25	3 Nm
DN 50	5 Nm
DN 80	10 Nm
DN 150	15 Nm

VALVE CHARACTERISTICS
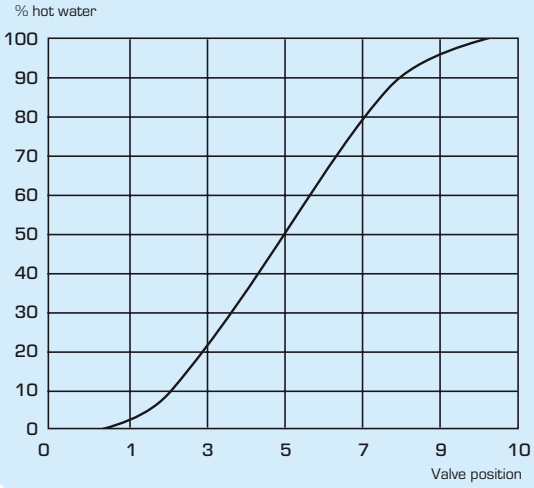

© Copyright. Rights reserved to make alterations.

ESBE
NO.1 IN HYDRONIC SYSTEM CONTROL

MIXING VALVE
SERIES 3F

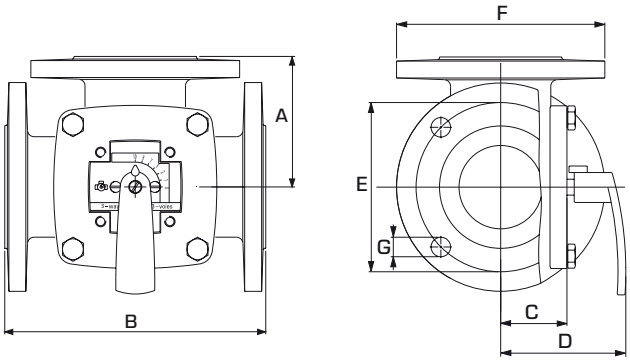

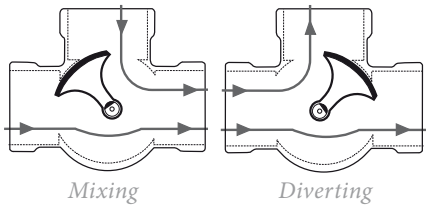

Flanged connection PN6,
standard EN 1092-2

The flat-sided spindle top
(as well as the indicator of the knob)
points towards the sleeve position.

SERIES 3F

Art. No.	Reference	DN	Kvs*	A	B	C	D	E	F	G	Weight [kg]
1110 01 00	3F 20	20	12	70	140	40	82	65	90	4x11.5	3.5
1110 02 00	3F 25	25	18	75	150	40	82	75	100	4x11.5	4.0
1110 03 00	3F 32	32	28	80	160	40	82	90	120	4x15	5.9
1110 04 00	3F 40	40	44	88	175	40	82	100	130	4x15	6.8
1110 06 00	3F 50	50	60	98	195	50	92	110	140	4x15	9.1
1110 08 00	3F 65	65	90	100	200	52	95	130	160	4x15	10.0
1110 10 00	3F 80	80	150	120	240	63	106	150	190	4x18	16.2
1110 12 00	3F 100	100	225	132	265	73	116	170	210	4x18	21.0
1110 14 00	3F 125	125	280	150	300	80	123	200	240	8x18	27.0
1110 16 00	3F 150	150	400	175	350	88	130	225	265	8x18	37.0

* Kvs-value in m^3/h at a pressure drop of 1 bar. Flow chart, see product catalogue.

NO.1 IN HYDRONIC SYSTEM CONTROL

© Copyright. Rights reserved to make alterations.