DATA SHEET

2024-11-07

DAB PUMPS S.p.A.
Via Marco Polo, 14 - 35035 Mestrino (PD), Italy
Tel. +39 049 5125000 - Fax +39 049 5125950
www.dabpumps.com

Receiver

Company
Reference
Address
Phone
Fax
E-mail

From

Item n° :

60214750

Customer pos. no.:

Model :

KLP 80-1200/BQQE T IE3

Pump data

MEI ≥ 0,6

Pressure rating :	1 MPa
Min. fluid temperature :	-15 °C
Max. fluid temperature :	120 °C
Max. Ambient temperature :	40 °C

Requested data

Flow :	
Head :	
Fluid (%) :	
Fluid Temperature :	20 °C
Density :	998,3 kg/m³
Kinematic viscosity :	1,005 mm²/s
Vapor pressure :	0,00 MPa

Hydraulic data (duty point)

Flow :	
Head :	
NPSH :	
Shaft power P2 :	
Efficiency :	

Materials

Pump body	Cast iron 250 UNI ISO 185
Support	Cast iron 250 UNI ISO 185
Impeller	Technoplymer B
Mechanical seal	Silicon carbide/Silicon carbide
O-Ring	EPDM Rubber
Shaft with rotor	Stainless Steel AISI 316

Motor data

Motor brand :	DAB	
Nominal power P2 :	1,84 kW	
Rated speed :	2.840 1/min	
Rated voltage :	3~ 230 V	50 Hz
Nominal current :	6,6 A	
Degree of protection :	IP 55	

Curve tolerance according to ISO 9906

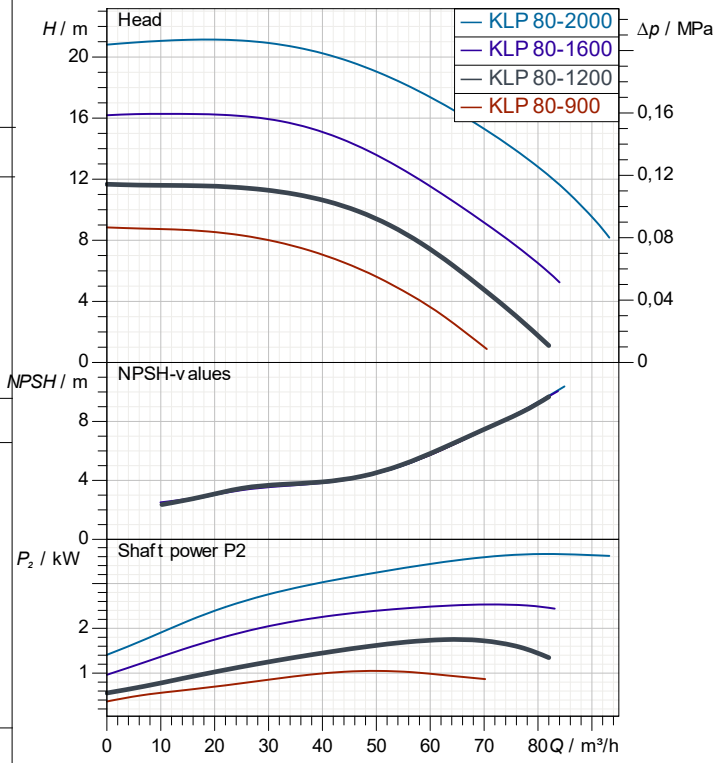

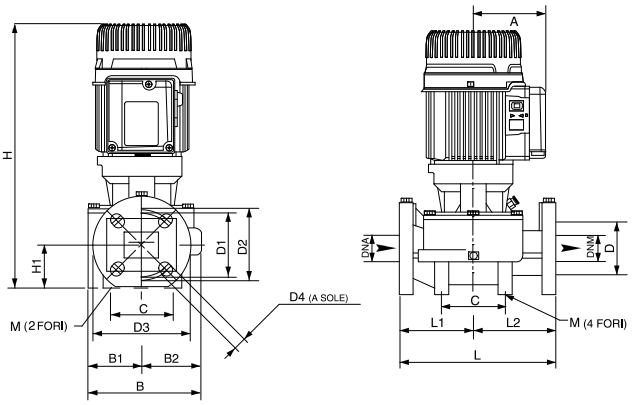

Weight : 40 kg

Dimensions in mm

A	118	D4	4 asole 18	M	2 fori 10
B	229	DNA	80		
B1	99	DNM	80		
B2	130	H	537		
D	128	H1	97		
D1	150	L	360		
D2	160	L1	190		
D3	200	L2	170		

Pump connection

Suction side :	DN 80	/ 1 MPa
Discharge side :	DN 80	/ 1 MPa

DAB PUMPS reserves the right to make modifications without notice

PERFORMANCE CURVES

2024-11-07

DAB PUMPS S.p.A.
Via Marco Polo, 14 - 35035 Mestrino (PD), Italy
Tel. +39 049 5125000 - Fax +39 049 5125950
www.dabpumps.com

	Receiver	From
Company		
Reference		
Address		
Phone		
Fax		
E-mail		

KLP 80-1200/BQQE T IE3

Curve tolerance according to ISO 9906

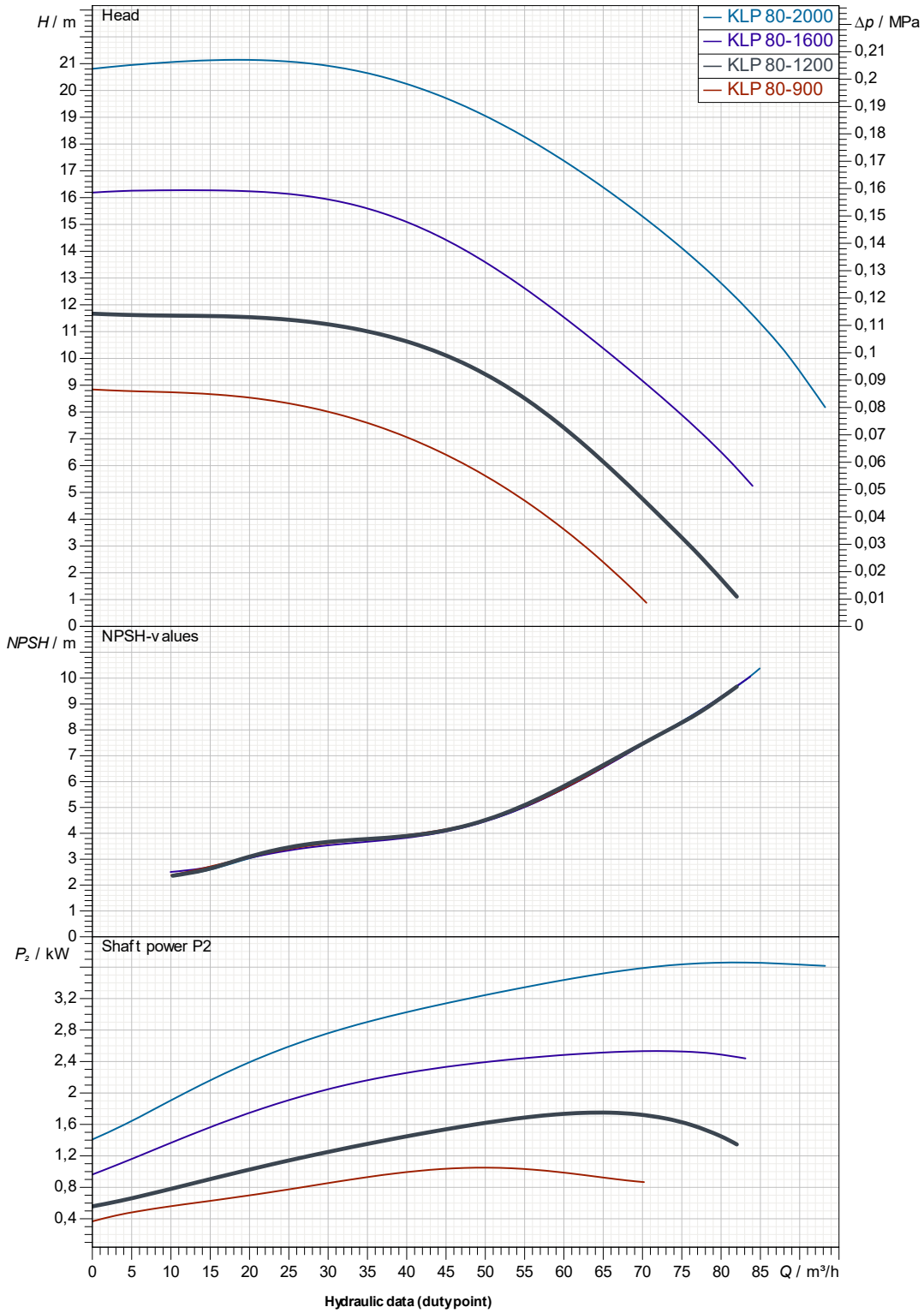

Hydraulic data (dutypoint)

Suction side :	Discharge side :	Flow :	Head :	Rated speed :
DN 80 1 MPa	DN 80 1 MPa			2.840 1/min

Project	Project ID	Created by	Created on
			2024-11-07

DAB PUMPS reserves the right to make modifications without notice

DIMENSIONAL DRAWING

2024-11-07

DAB PUMPS S.p.A.
Via Marco Polo, 14 - 35035 Mestrino (PD), Italy
Tel. +39 049 5125000 - Fax +39 049 5125950
www.dabpumps.com

	Receiver	From
Company Reference Address Phone Fax E-mail		

KLP 80-1200/BQQE T IE3

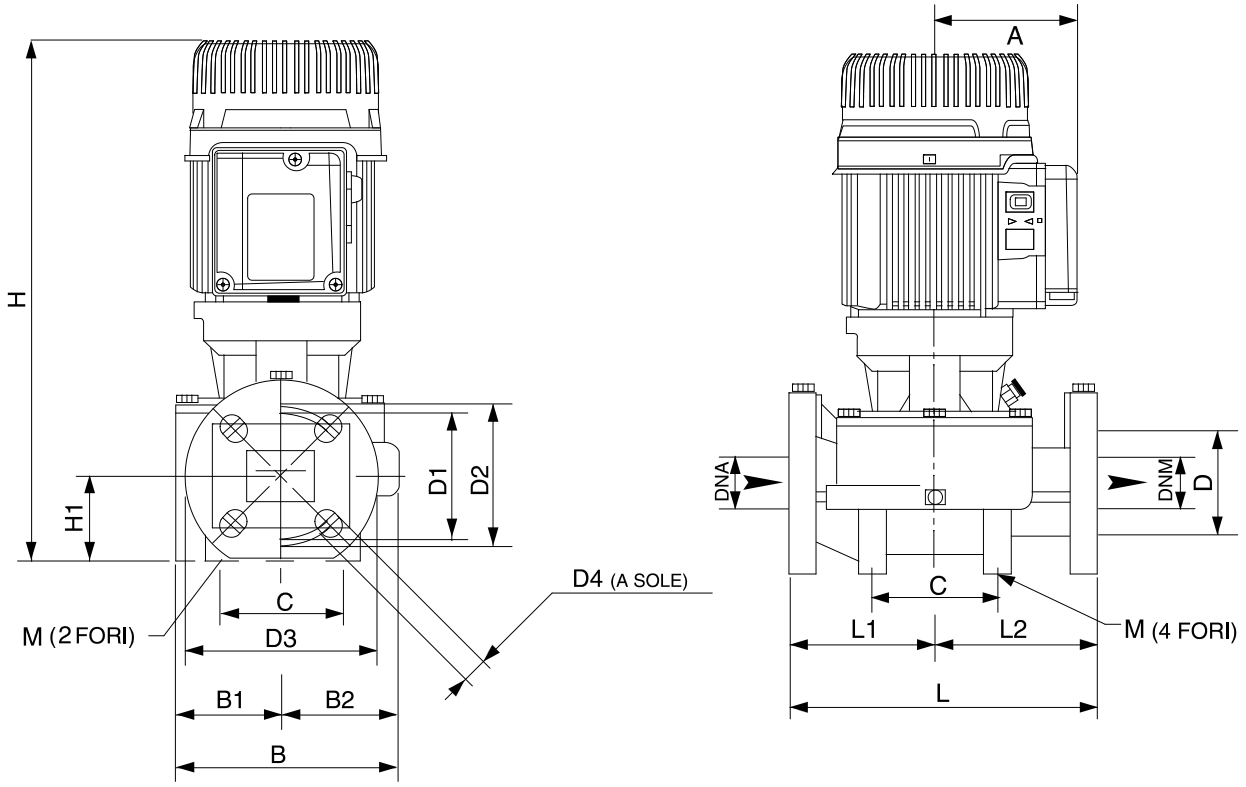

	Dimensions in mm						Pump connection
1	A	118	H	537			
2	B	229	H1	97			Suction
3	B1	99	L	360			DN 80
4	B2	130	L1	190			1 MPa
5	D	128	L2	170			
6	D1	150	M	2 fori 10			
7	D2	160					Discharge
8	D3	200					DN 80
9	D4	4 asole 18x23					1 MPa
10	DNA	80					
11	DNM	80					

Project	Project ID	Created by	Created on
			2024-11-07

DAB PUMPS reserves the right to make modifications without notice