DATA SHEET

2024-11-07

DAB PUMPS S.p.A.
Via Marco Polo, 14 - 35035 Mestrino (PD), Italy
Tel. +39 049 5125000 - Fax +39 049 5125950
www.dabpumps.com

Receiver

Company
Reference
Address
Phone
Fax
E-mail

From

Item n° :

60214772

Customer pos. no.:

Model :

DKLP 40-1800/BQQE T IE3

Pump data

MEI ≥ 0,5

Pressure rating :	1 MPa
Min. fluid temperature :	-15 °C
Max. fluid temperature :	120 °C
Max. Ambient temperature :	40 °C

Requested data

Flow :	
Head :	
Fluid (%) :	
Fluid Temperature :	20 °C
Density :	998,3 kg/m³
Kinematic viscosity :	1,005 mm²/s
Vapor pressure :	0,00 MPa

Hydraulic data (duty point)

Flow :	
Head :	
NPSH :	
Shaft power P2 :	
Efficiency :	

Materials

Pump body	Cast iron 250 UNI ISO 185
Support	Cast iron 250 UNI ISO 185
Impeller	Technoplymer B
Mechanical seal	Silicon carbide/Silicon carbide
O-Ring	EPDM Rubber
Shaft with rotor	Stainless Steel AISI 316

Motor data

Motor brand :	DAB	
Nominal power P2 :	1 X 0,85 kW	
Rated speed :	2.841 1/min	
Rated voltage :	3~ 230 V	50 Hz
Nominal current :	1 X 3,29 A	
Degree of protection :	IP 55	

Curve tolerance according to ISO 9906
Number of working motors : 1

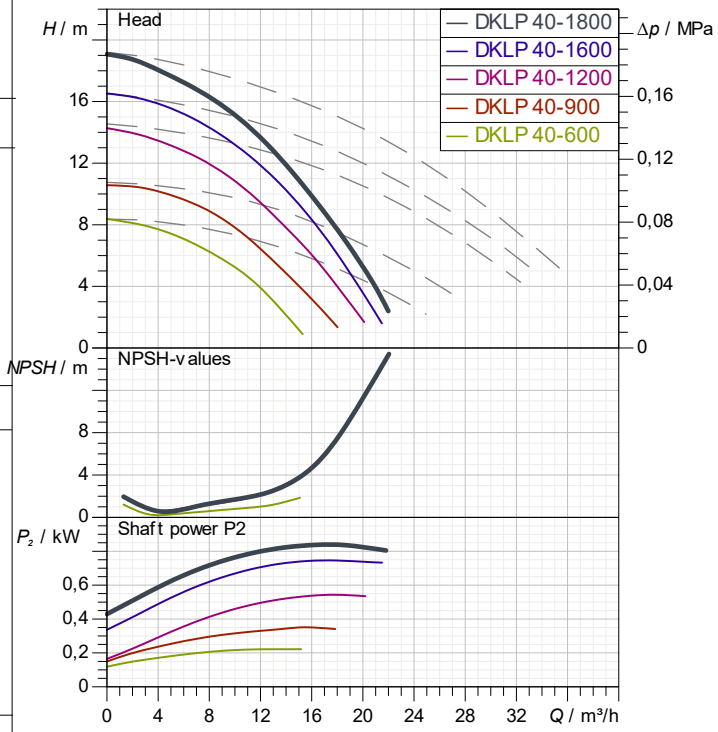

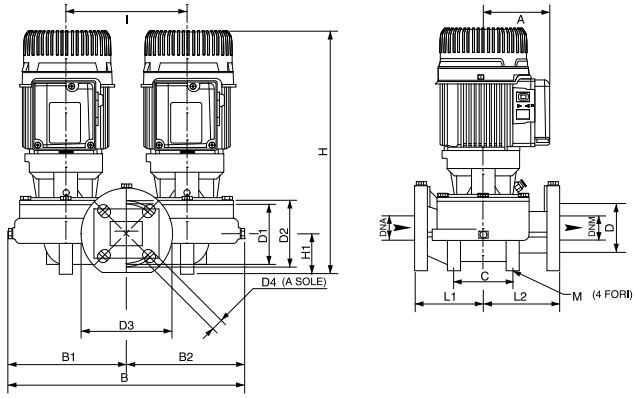

Weight : 45,8 kg

Dimensions in mm

A	110	D3	150	L1	125
B	437	D4	4 asole 18	L2	125
B1	217	DNA	40	M	4 fori 12
B2	220	DNM	40		
C	100	H	400		
D	80	H1	55		
D1	100	I	200		
D2	110	L	250		

Pump connection

Suction side :	DN 40	/	1 MPa
Discharge side :	DN 40	/	1 MPa

DAB PUMPS reserves the right to make modifications without notice

PERFORMANCE CURVES

2024-11-07

DAB PUMPS S.p.A.
Via Marco Polo, 14 - 35035 Mestrino (PD), Italy
Tel. +39 049 5125000 - Fax +39 049 5125950
www.dabpumps.com

	Receiver	From
Company Reference Address Phone Fax E-mail		

DKLP 40-1800/BQQE T IE3

Number of working motors : 1

Curve tolerance according to ISO 9906

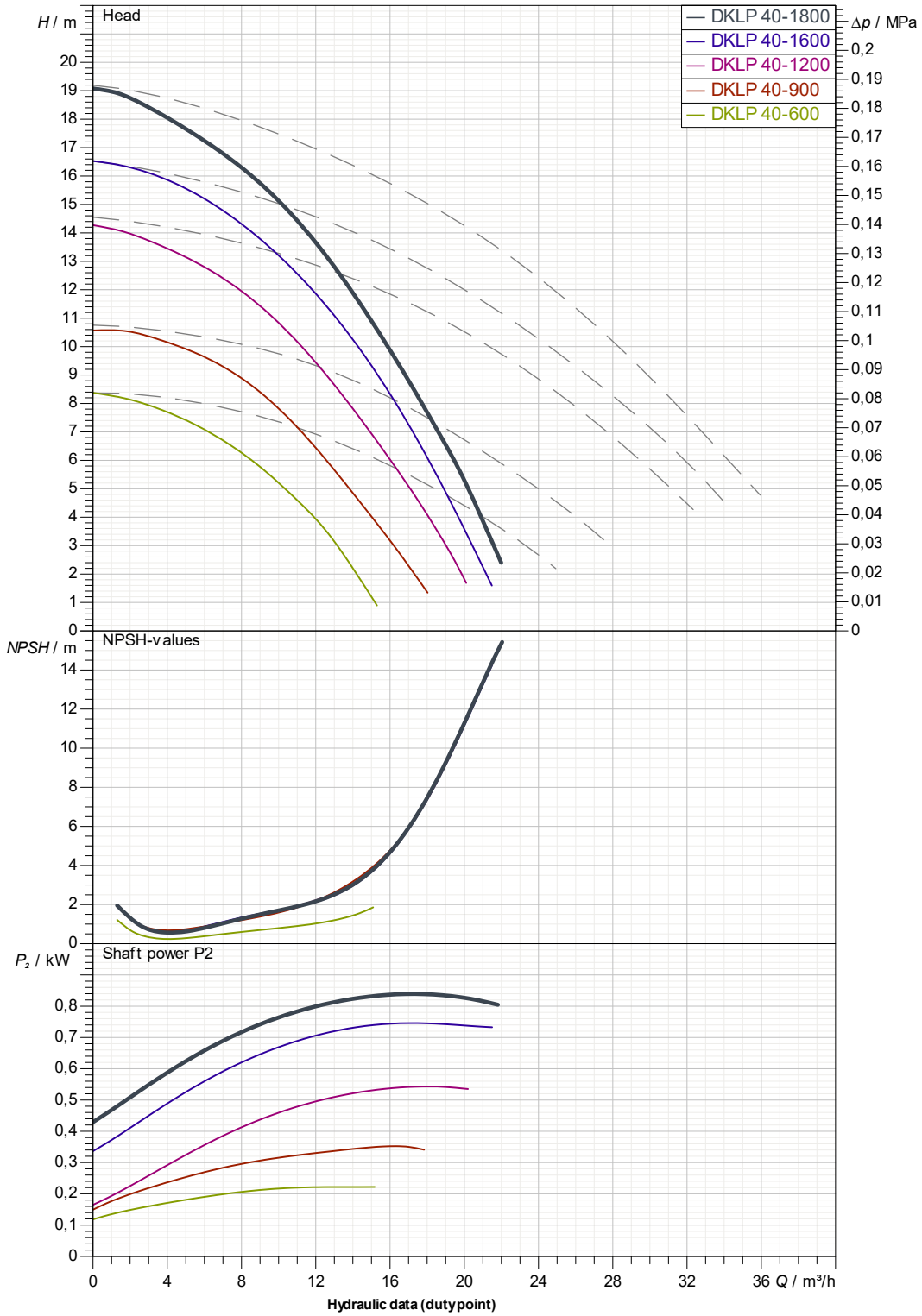

Suction side :	Discharge side :	Flow :	Head :	Rated speed :
DN 40 1 MPa	DN 40 1 MPa			2.841 1/min

MAIN_PROJECT_TITLE	BUSINESS_PROCESS_ID	OWNER_	ISSUE_DATE
			2024-11-07

DAB PUMPS reserves the right to make modifications without notice

DIMENSIONAL DRAWING

2024-11-07

DAB PUMPS S.p.A.
Via Marco Polo, 14 - 35035 Mestrino (PD), Italy
Tel. +39 049 5125000 - Fax +39 049 5125950
www.dabpumps.com

	Receiver	From
Company Reference Address Phone Fax E-mail		

DKLP 40-1800/BQQE T IE3

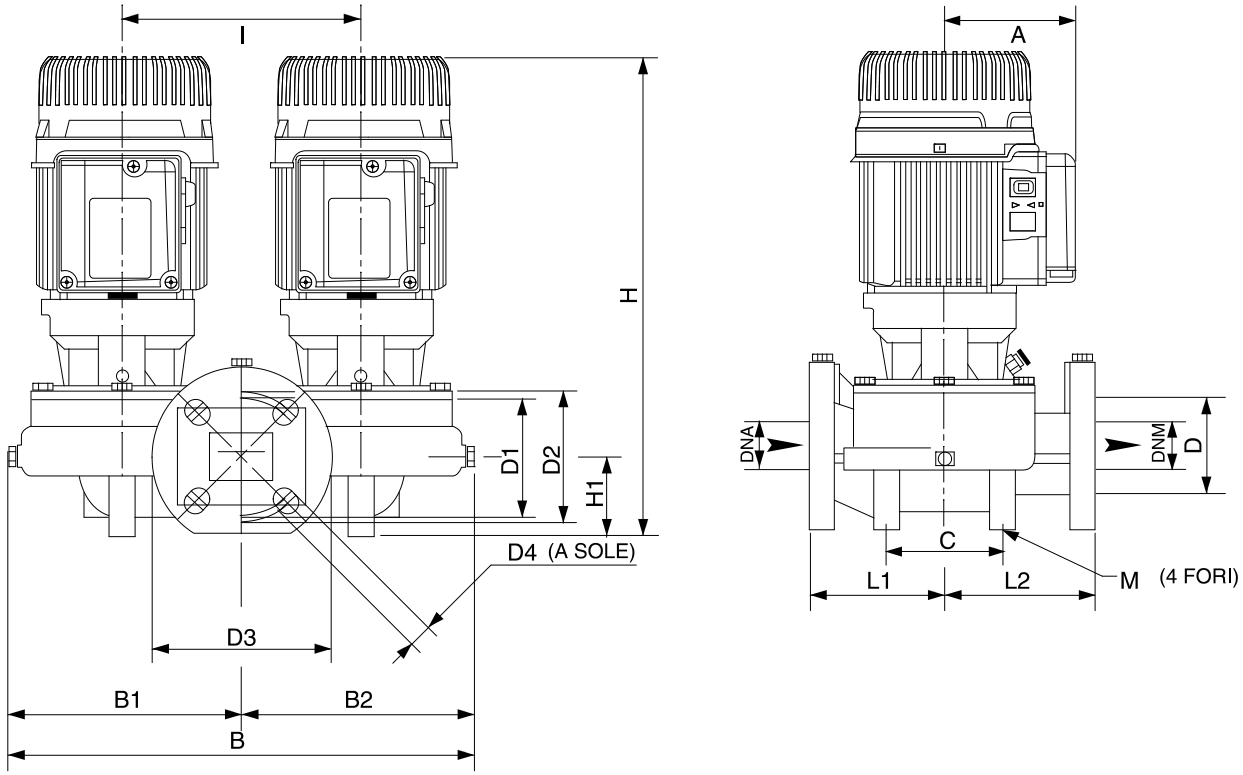

	Dimensions in mm						Pump connection
1	A	110	DNM	40			
2	B	437	H	400			Suction
3	B1	217	H1	55			DN 40
4	B2	220	I	200			1 MPa
5	C	100	L	250			
6	D	80	L1	125			
7	D1	100	L2	125			Discharge
8	D2	110	M	4 fori 12			DN 40
9	D3	150					1 MPa
10	D4	4 asole 18X23					
11	DNA	40					

Project	Project ID	Created by	Created on
			2024-11-07

DAB PUMPS reserves the right to make modifications without notice