DATA SHEET

2024-11-07

DAB PUMPS S.p.A.
Via Marco Polo, 14 - 35035 Mestrino (PD), Italy
Tel. +39 049 5125000 - Fax +39 049 5125950
www.dabpumps.com

Receiver

Company
Reference
Address
Phone
Fax
E-mail

From

Item n° :

60212441

Customer pos. no.:

Model :

KLP 40-1800/BQQE M IE2

Pump data

MEI ≥ 0,5

Pressure rating :	1 MPa
Min. fluid temperature :	-15 °C
Max. fluid temperature :	120 °C
Max. Ambient temperature :	40 °C

Requested data

Flow :	
Head :	
Fluid (%) :	
Fluid Temperature :	20 °C
Density :	998,3 kg/m³
Kinematic viscosity :	1,005 mm²/s
Vapor pressure :	0,00 MPa

Hydraulic data (duty point)

Flow :	
Head :	
NPSH :	
Shaft power P2 :	
Efficiency :	

Materials

Pump body	Cast iron 250 UNI ISO 185
Support	Cast iron 250 UNI ISO 185
Impeller	Technoplymer B
Mechanical seal	Silicon carbide/Silicon carbide
O-Ring	EPDM Rubber
Shaft with rotor	Stainless Steel AISI 316

Motor data

Motor brand :	DAB	
Nominal power P2 :	0,75 kW	
Rated speed :	2.910 1/min	
Rated voltage :	1~ 230 V	50 Hz
Nominal current :	4,4 A	
Degree of protection :	IP 55	

Curve tolerance according to ISO 9906

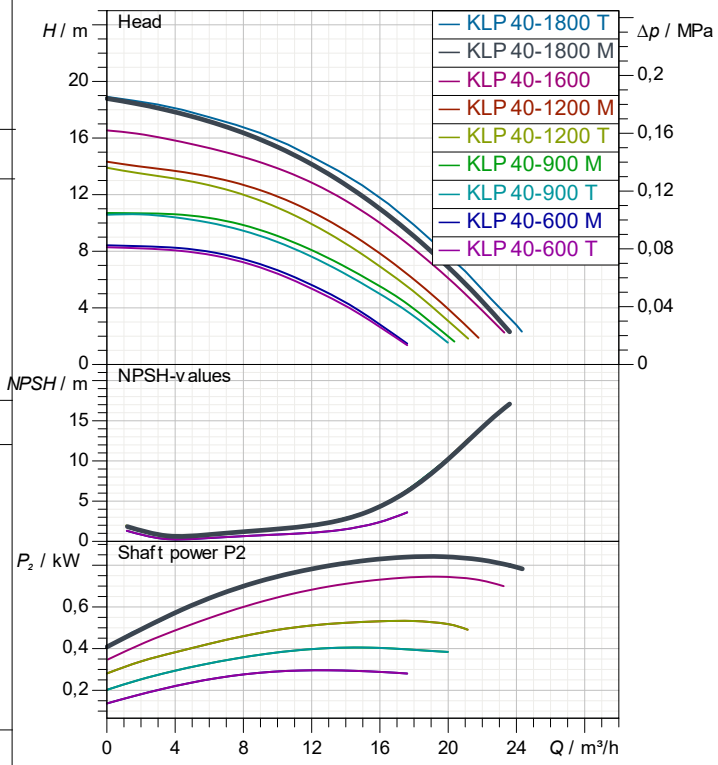

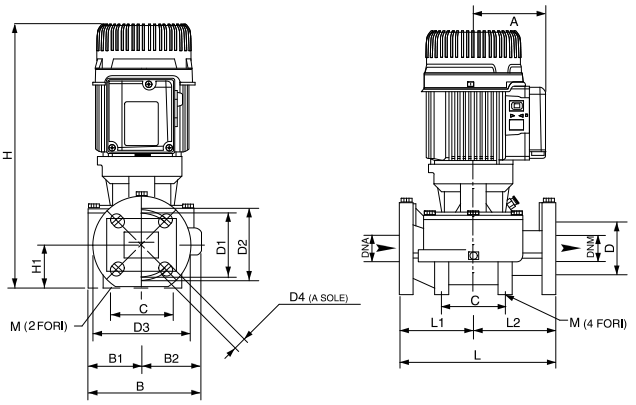

Weight : 24,5 kg

Dimensions in mm

A	110	D3	150	L2	125
B	179	D4	4 asole 18	M	2 fori 10
B1	82	DNA	40		
B2	97	DNM	40		
C	100	H	395		
D	80	H1	66		
D1	100	L	250		
D2	110	L1	125		

Pump connection

Suction side :	DN 40	/	1 MPa
Discharge side :	DN 40	/	1 MPa

DAB PUMPS reserves the right to make modifications without notice

PERFORMANCE CURVES

2024-11-07

DAB PUMPS S.p.A.
Via Marco Polo, 14 - 35035 Mestrino (PD), Italy
Tel. +39 049 5125000 - Fax +39 049 5125950
www.dabpumps.com

	Receiver	From
Company		
Reference		
Address		
Phone		
Fax		
E-mail		

KLP 40-1800/BQQE M IE2

Curve tolerance according to ISO 9906

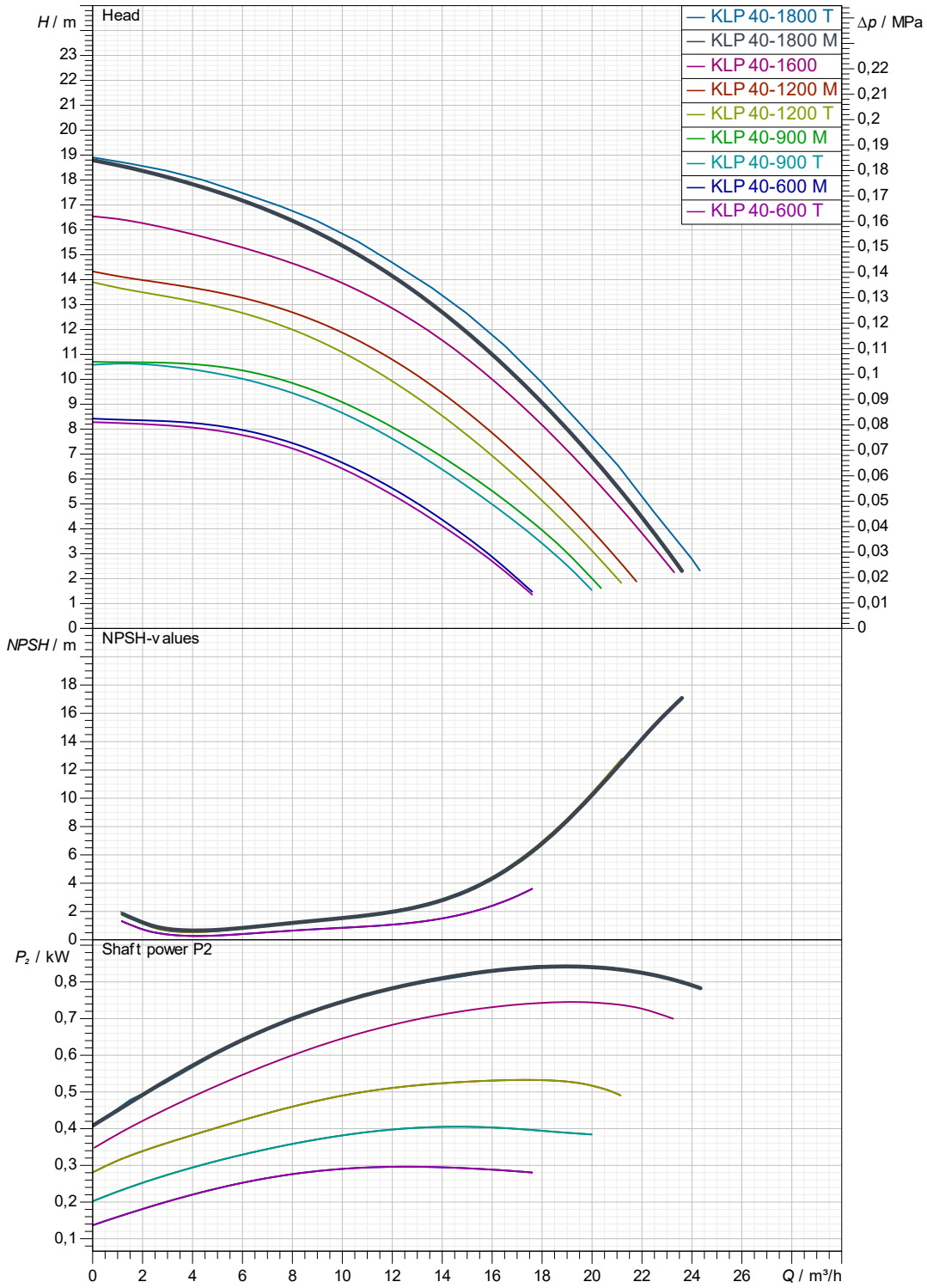

Hydraulic data (dutypoint)

Suction side :	Discharge side :	Flow :	Head :	Rated speed :
DN 40	DN 40			2.910 1/min
1 MPa	1 MPa			

Project	Project ID	Created by	Created on
			2024-11-07

DAB PUMPS reserves the right to make modifications without notice

DIMENSIONAL DRAWING

2024-11-07

DAB PUMPS S.p.A.
Via Marco Polo, 14 - 35035 Mestrino (PD), Italy
Tel. +39 049 5125000 - Fax +39 049 5125950
www.dabpumps.com

	Receiver	From
Company Reference Address Phone Fax E-mail		

KLP 40-1800/BQQE M IE2

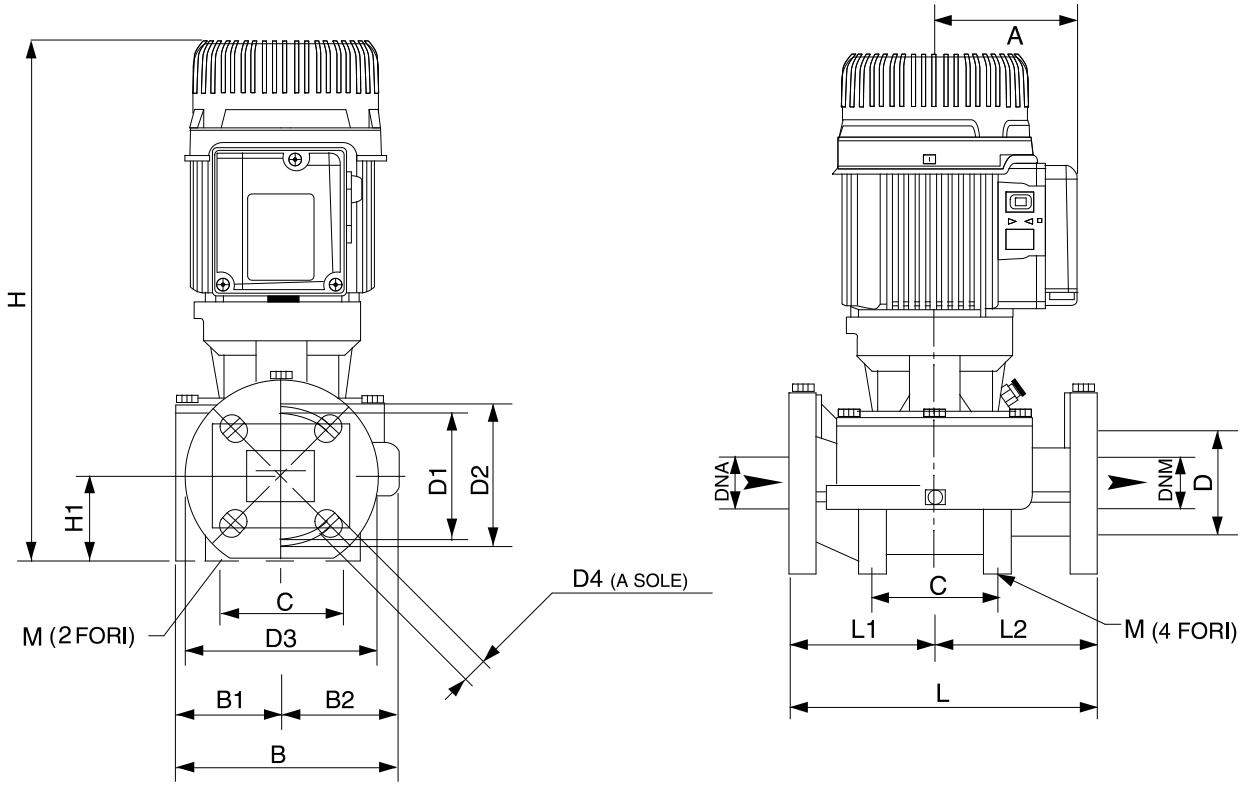

	Dimensions in mm						Pump connection
1	A	110	DNM	40			
2	B	179	H	395			Suction
3	B1	82	H1	66			DN 40
4	B2	97	L	250			1 MPa
5	C	100	L1	125			
6	D	80	L2	125			
7	D1	100	M	2 fori 10			Discharge
8	D2	110					DN 40
9	D3	150					1 MPa
10	D4	4 asole 18x23					
11	DNA	40					

Project	Project ID	Created by	Created on
			2024-11-07

DAB PUMPS reserves the right to make modifications without notice