DATA SHEET

2024-11-05

DAB PUMPS S.p.A.
Via Marco Polo, 14 - 35035 Mestrino (PD), Italy
Tel. +39 049 5125000 - Fax +39 049 5125950
www.dabpumps.com

Receiver

Company
Reference
Address
Phone
Fax
E-mail

From

Item n° : 60214715

Customer pos. no.:

Model :
DKLPE 80-1200/BQQE T MCE30/C IE3

Pump data

MEI ≥ 0,6

Pressure rating :	1 MPa
Min. fluid temperature :	-15 °C
Max. fluid temperature :	120 °C
Max. Ambient temperature :	40 °C

Requested data

Flow :	
Head :	
Fluid (%) :	
Fluid Temperature :	20 °C
Density :	998,3 kg/m³
Kinematic viscosity :	1,005 mm²/s
Vapor pressure :	0,00 MPa

Hydraulic data (duty point)

Flow :	
Head :	
NPSH :	
Shaft power P2 :	
Efficiency :	

Materials

Pump body	Cast iron 250 UNI ISO 185
Support	Cast iron 250 UNI ISO 185
Impeller	Technoplymer B
Mechanical seal	Silicon carbide/Silicon carbide
O-Ring	EPDM Rubber
Shaft with rotor	Stainless Steel AISI 316

Technical data :

Nominal power P2 :	1 X 1,84 kW	
Rated speed :	2.840 1/min	
Rated voltage :	3~ 400 V	50 Hz
Input current :	1 X 5 A	
Degree of motor protection :	IP 55	

Curve tolerance according to ISO 9906

Number of working motors : 1

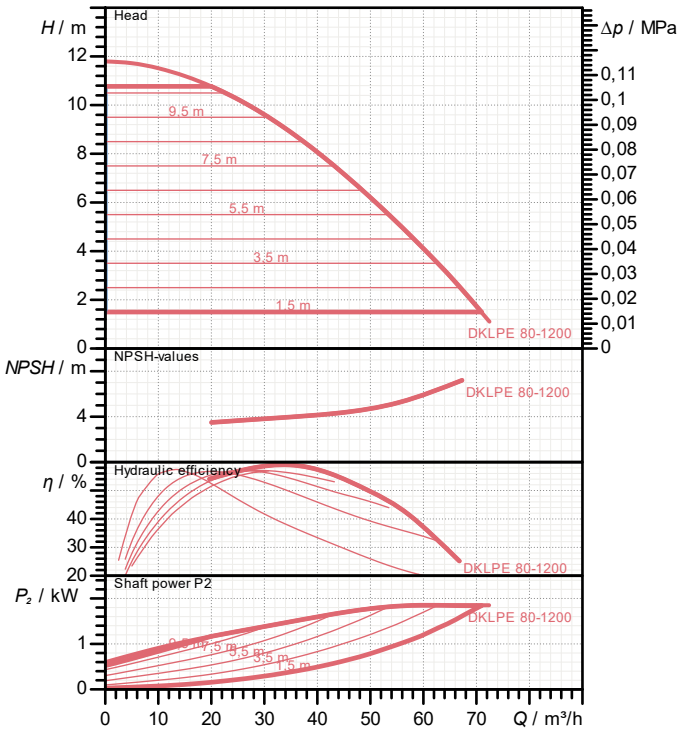

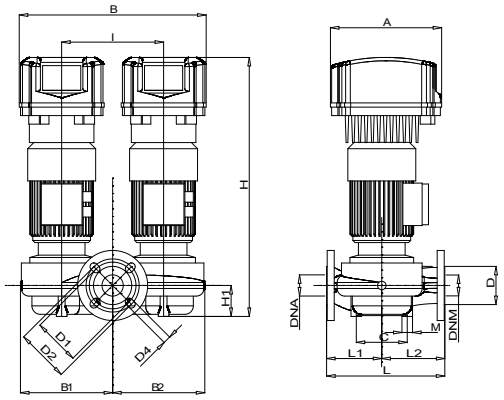

Weight : 108 kg

Dimensions in mm

A	353	D3	200	L1	160
B	537	D4	4 asole 18	L2	200
B1	230	DNA	80	M	4 fori M14
B2	233	DNM	80		
C	150	H	743		
D	128	H1	97		
D1	150	I	240		
D2	160	L	360		

Pump connection

Suction side :	DN 80	/	1 MPa
Discharge side :	DN 80	/	1 MPa

DAB PUMPS reserves the right to make modifications without notice

PERFORMANCE CURVES

2024-11-05

DAB PUMPS S.p.A.
Via Marco Polo, 14 - 35035 Mestrino (PD), Italy
Tel. +39 049 5125000 - Fax +39 049 5125950
www.dabpumps.com

	Receiver	From
Company Reference Address Phone Fax E-mail		

DKLPE 80-1200/BQQE T MCE30/C IE3

Number of working motors : 1

Curve tolerance according to ISO 9906

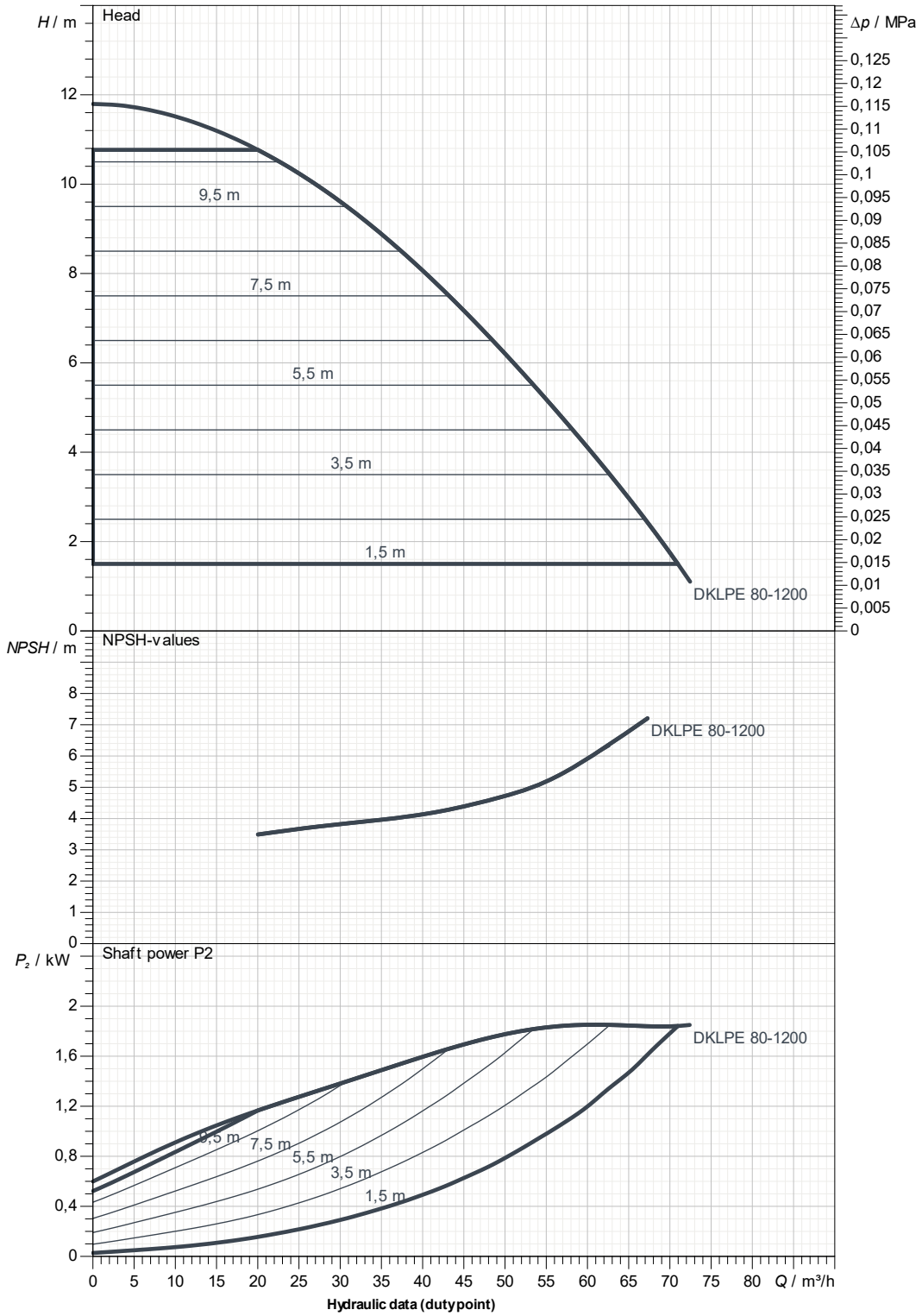

Suction side :	Discharge side :	Flow :	Head :	Rated speed :
DN 80 1 MPa	DN 80 1 MPa			2.840 1/min

MAIN_PROJECT_TITLE	BUSINESS_PROCESS_ID	OWNER_	ISSUE_DATE
			2024-11-05

DAB PUMPS reserves the right to make modifications without notice

DIMENSIONAL DRAWING

2024-11-05

DAB PUMPS S.p.A.
Via Marco Polo, 14 - 35035 Mestrino (PD), Italy
Tel. +39 049 5125000 - Fax +39 049 5125950
www.dabpumps.com

	Receiver	From
Company Reference Address Phone Fax E-mail		

DKLPE 80-1200/BQQE T MCE30/C IE3

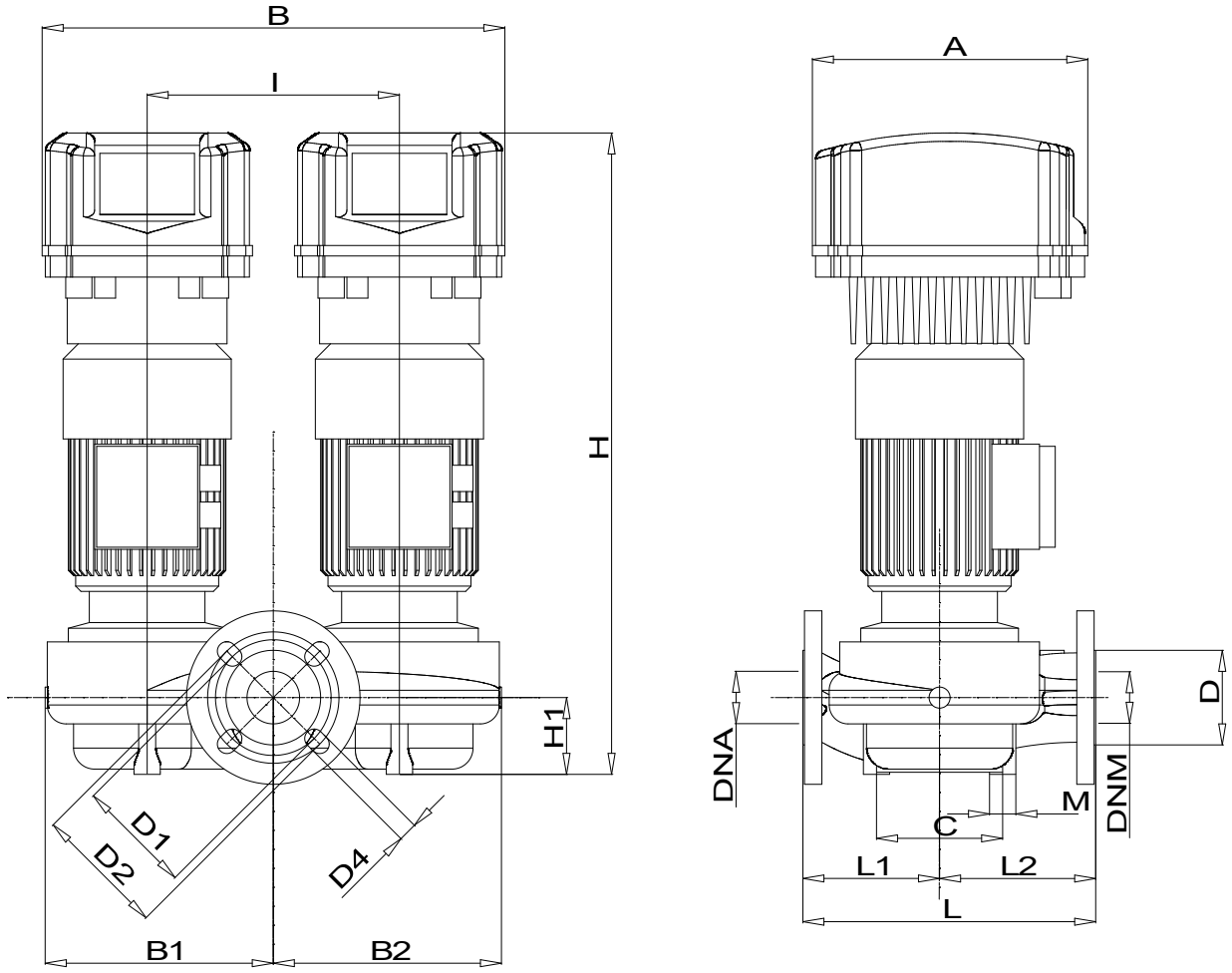

	Dimensions in mm						Pump connection
1	A	353	DNM	80			
2	B	537	H	743			Suction
3	B1	230	H1	97			DN 80
4	B2	233	I	240			1 MPa
5	C	150	L	360			
6	D	128	L1	160			
7	D1	150	L2	200			Discharge
8	D2	160	M	4 fori M14			DN 80
9	D3	200					1 MPa
10	D4	4 asole 18x23					
11	DNA	80					

Project	Project ID	Created by	Created on
			2024-11-05

DAB PUMPS reserves the right to make modifications without notice