# DATA SHEET

2024-11-05



DAB PUMPS S.p.A.
Via Marco Polo, 14 - 35035 Mestrino (PD), Italy
Tel. +39 049 5125000 - Fax +39 049 5125950
www.dabpumps.com

| Receiver | From |
|---|---|
| Company | |
| Reference | |
| Address | |
| Phone | |
| Fax | |
| E-mail | |

**Item n° :** 60151171

**Customer pos. no.:**

**Model :**

EVOPLUS B 180/280.50 SAN M

## Pump data

| | |
|---|---|
| Pressure rating : | 1,6 MPa |
| Min. fluid temperature : | -10 °C |
| Max. fluid temperature : | 110 °C |
| EEI : | ≤ *** |

## Minimun suction head :

| | | | |
|---|---|---|---|
| Temperature | °C | 90 | 100 |
| Minimun suction head : | m | 20 | 25 |

## Requested data

| | |
|---|---|
| Flow : | |
| Head : | |
| Fluid (%) : | |
| Fluid Temperature : | 20 °C |
| Density : | 998,3 kg/m³ |
| Kinematic viscosity : | 1,005 mm²/s |
| Vapor pressure : | 0,00 MPa |

## Hydraulic data (duty point)

| | |
|---|---|
| Flow : | |
| Head : | |

## Materials

| | |
|---|---|
| Pump body | Bronze |
| Impeller | Technopolymer |
| Motor shaft | Stainless steel |
| Seal ring | EPDM |
| Motor casing | Die cast aluminium |
| Closing flange | Stainless steel |
| Thrust ring support | Stainless steel |

**Curve tolerance according to ISO 9906**

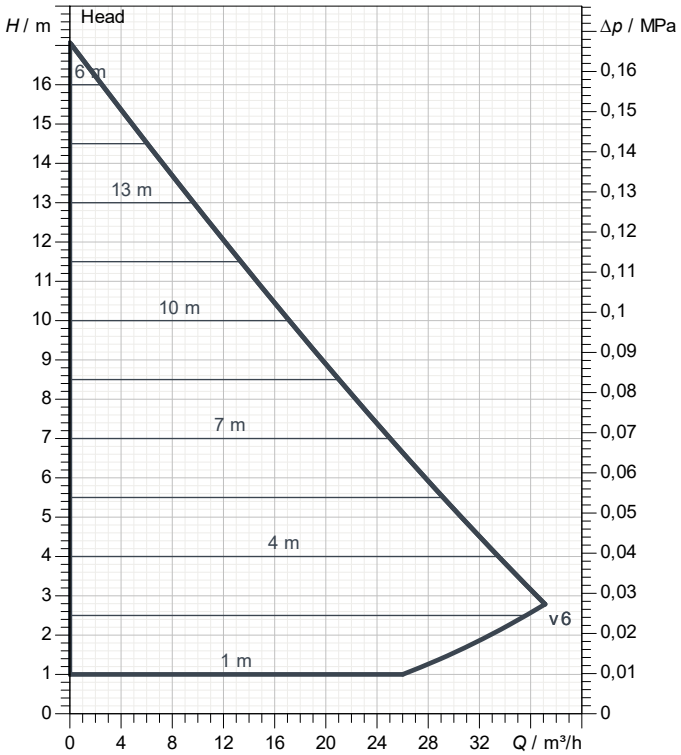


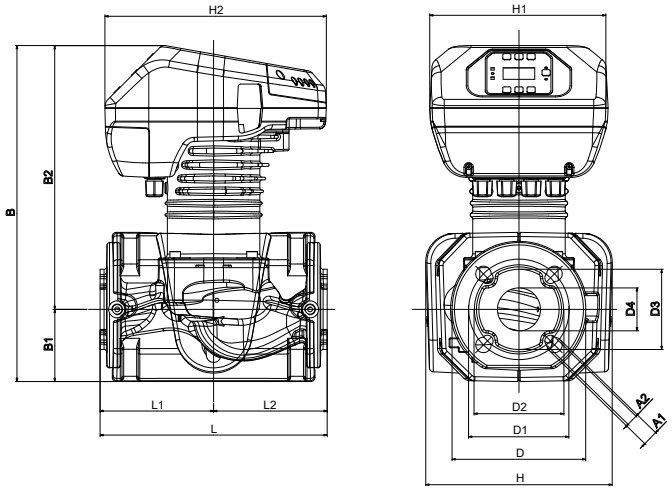


## Motor data

| | | | |
|---|---|---|---|
| Motor brand : | DAB | | |
| Max. Power input P1 : | 0,75 kW | | |
| Rated voltage : | 1~ | 220-240 V | 50 Hz |
| Nominal current : | 3,45 A | | |
| Degree of protection : | IP 44 | | |

**Dimensions in** mm

| | | | | | | | |
|---|---|---|---|---|---|---|---|
| A1 | 19 | D1 | 125 | H2 | 273 | | |
| A2 | 14 | D2 | 110 | L | 280 | | |
| B | 413 | D3 | 99 | L1 | 140 | | |
| B1 | 87 | D4 | 53 | L2 | 140 | | |
| B2 | 325 | H | 230 | | | | |
| D | 165 | H1 | 220 | | | | |

**Weight :** 22,8 kg

## Pump connection

| | | | |
|---|---|---|---|
| Suction side : | DN 50 | / | PN 16 |
| Discharge side : | DN 50 | / | PN 16 |

DAB PUMPS reserves the right to make modifications without notice

# PERFORMANCE CURVES

2024-11-05



DAB PUMPS S.p.A.
Via Marco Polo, 14 - 35035 Mestrino (PD), Italy
Tel. +39 049 5125000 - Fax +39 049 5125950
www.dabpumps.com

| | Receiver | From |
|---|---|---|
| Company | | |
| Reference | | |
| Address | | |
| Phone | | |
| Fax | | |
| E-mail | | |

**EVOPLUS B 180/280.50 SAN M**

**Curve tolerance according to ISO 9906**

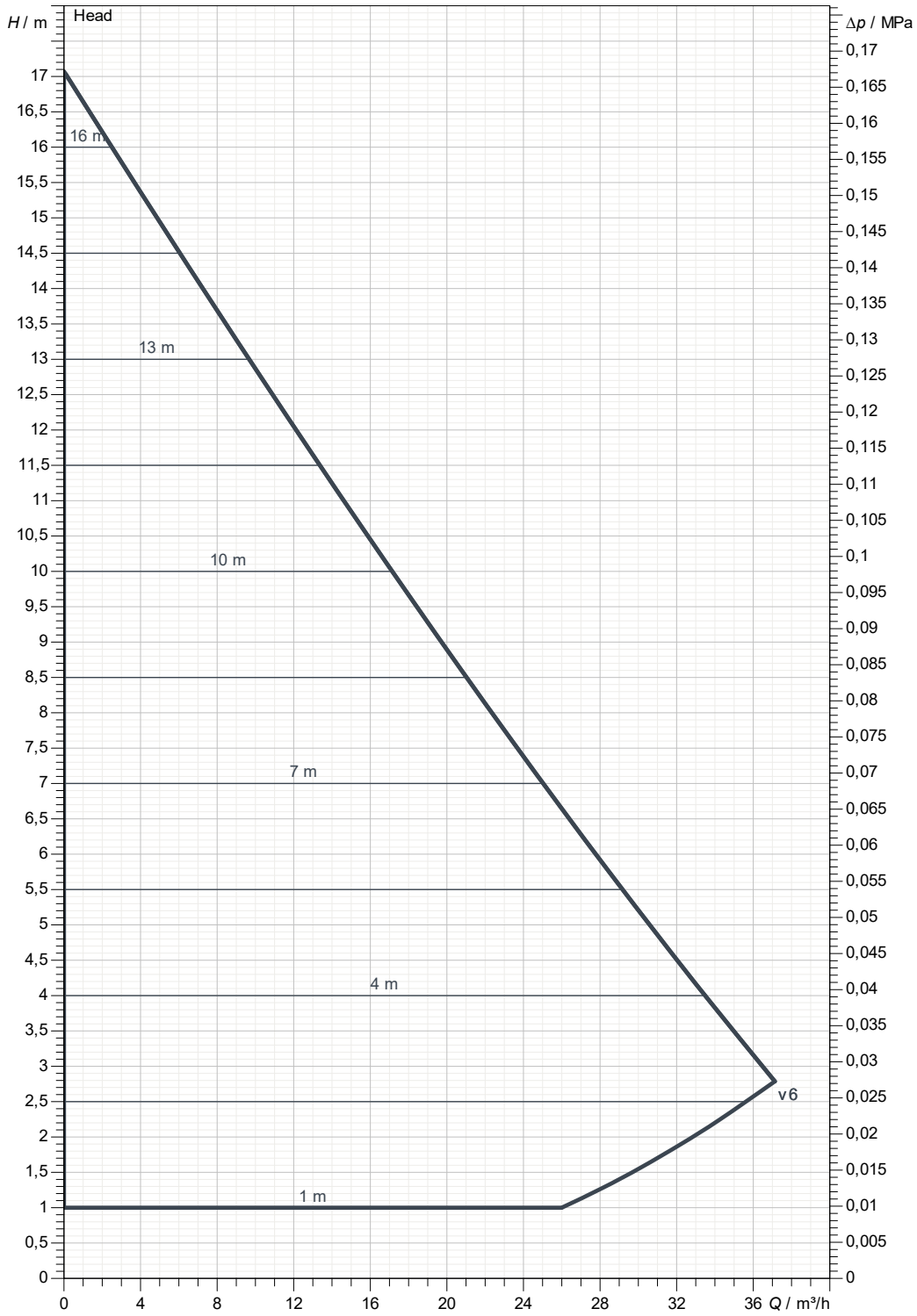


**Hydraulic data (dutypoint)**

| Suction side : | Discharge side : | Flow : | Head : | Rated speed : |
|---|---|---|---|---|
| DN 50 | DN 50 | | | 5.100 1/min |
| PN 16 | PN 16 | | | |

| MAIN_PROJECT_TITLE | BUSINESS_PROCESS_ID | OWNER_ | ISSUE_DATE |
|---|---|---|---|
| | | | **2024-11-05** |

DAB PUMPS reserves the right to make modifications without notice

# DIMENSIONAL DRAWING

2024-11-05



DAB PUMPS S.p.A.
Via Marco Polo, 14 - 35035 Mestrino (PD), Italy
Tel. +39 049 5125000 - Fax +39 049 5125950
www.dabpumps.com

| | Receiver | From |
|---|---|---|
| Company<br>Reference<br>Address<br>Phone<br>Fax<br>E-mail | | |

## EVOPLUS B 180/280.50 SAN M

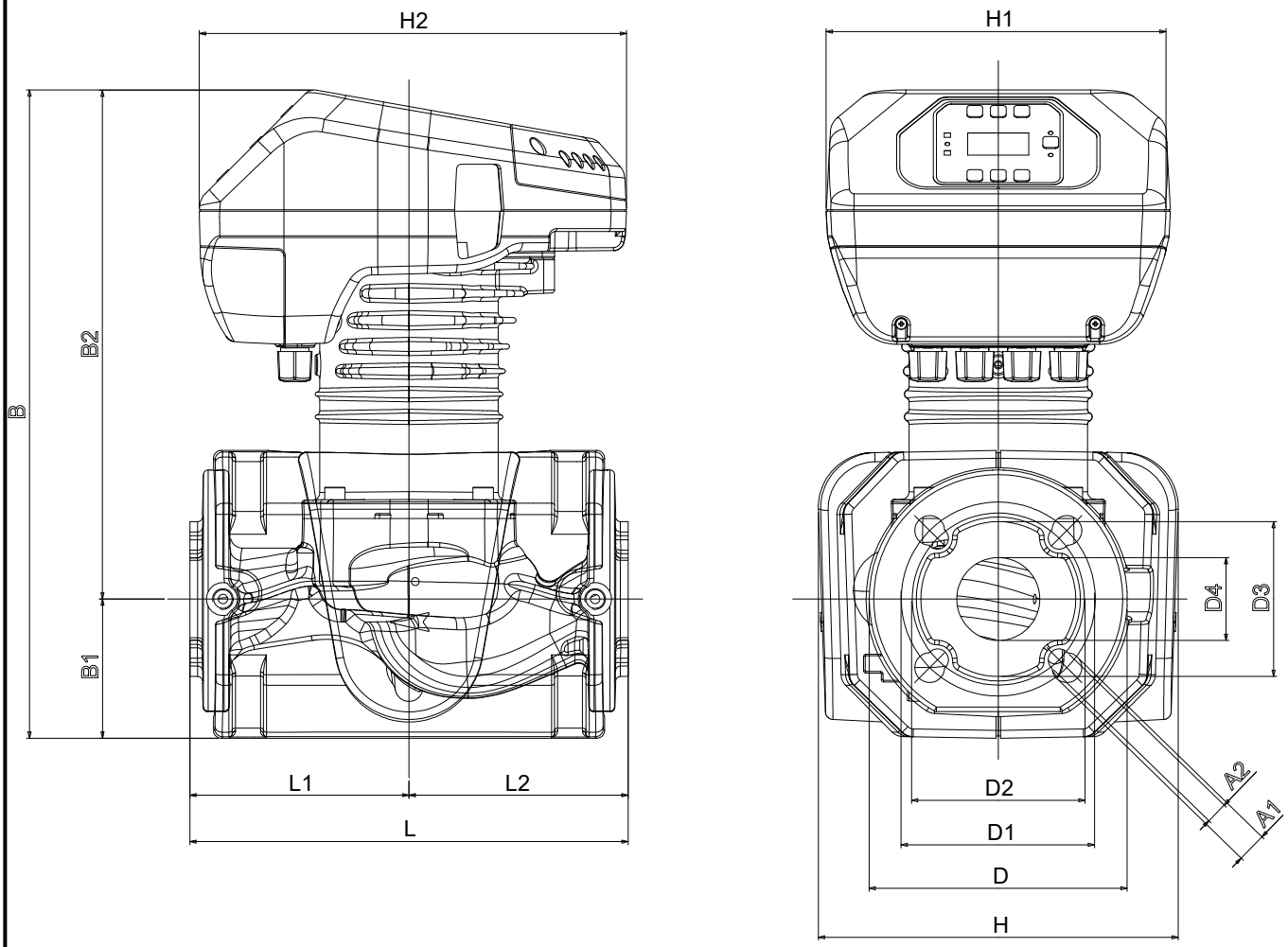


| Dimensions in mm | | | | | | | Pump connection |
|---|---|---|---|---|---|---|---|
| 1 | A1 | 19 | H1 | 220 | | | |
| 2 | A2 | 14 | H2 | 273 | | | Suction |
| 3 | B | 413 | L | 280 | | | DN 50 |
| 4 | B1 | 87 | L1 | 140 | | | PN 16 |
| 5 | B2 | 325 | L2 | 140 | | | |
| 6 | D | 165 | | | | | |
| 7 | D1 | 125 | | | | | Discharge |
| 8 | D2 | 110 | | | | | DN 50 |
| 9 | D3 | 99 | | | | | PN 16 |
| 10 | D4 | 53 | | | | | |
| 11 | H | 230 | | | | | |

| MAIN_PROJECT_TITLE | BUSINESS_PROCESS_ID | OWNER_ | ISSUE_DATE |
|---|---|---|---|
| | | | **2024-11-05** |

DAB PUMPS reserves the right to make modifications without notice