DATA SHEET

2024-11-05

DAB PUMPS S.p.A.
Via Marco Polo, 14 - 35035 Mestrino (PD), Italy
Tel. +39 049 5125000 - Fax +39 049 5125950
www.dabpumps.com

Receiver	From
Company	
Reference	
Address	
Phone	
Fax	
E-mail	

Item n° : 60185505

Customer pos. no.:

Model :

EVOSTA3 80/180

Pump data

Pressure rating :	1 MPa
Min. fluid temperature :	-10 °C
Max. fluid temperature :	110 °C
EEI :	≤ 0,19

Minimun suction head :

Temperature	°C	90
Minimun suction head :	m	10

Requested data

Flow :	
Head :	
Fluid (%) :	
Fluid Temperature :	20 °C
Density :	998,3 kg/m³
Kinematic viscosity :	1,005 mm²/s
Vapor pressure :	0,00 MPa

Hydraulic data (duty point)

Flow :	
Head :	

Materials

Pump body	Cast iron with cataphoresis
Impeller	Ultrason
Shaft	Alumina
Rotor	Fe
Motor casing	Stainless Steel (AISI 304)
Stator jacket	AISI 316
Air vent plug	Brass

Curve tolerance according to ISO 9906

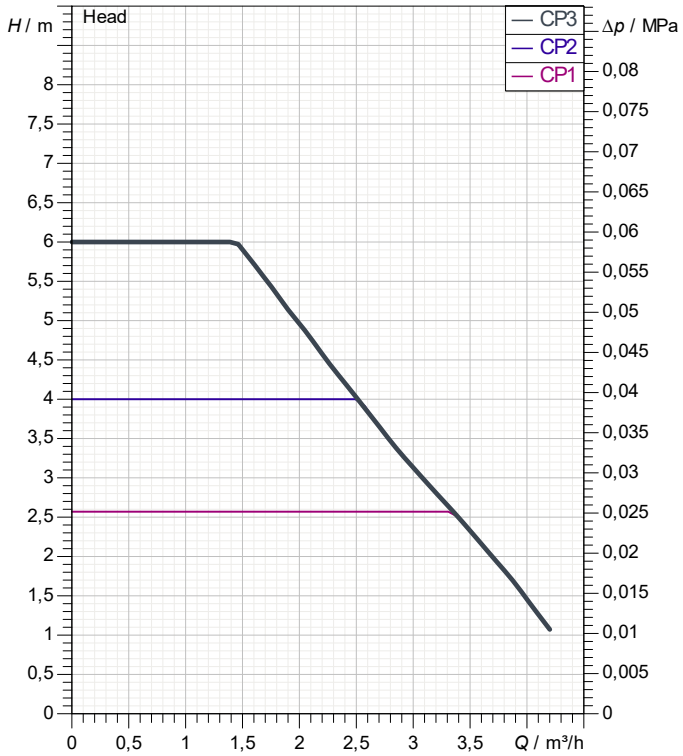

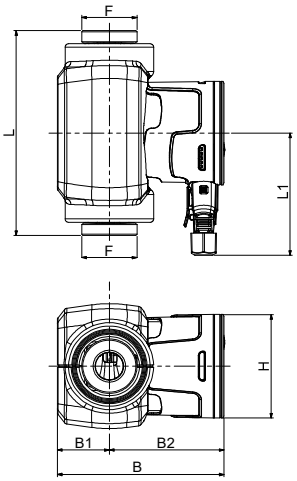

Motor data

Motor brand :	DAB		
Max. Power input P1 :	0,055 kW		
Rated voltage :	1~	230 V	50 Hz
Nominal current :	0,47 A		
Degree of protection :	IP X5		

Dimensions in mm

B	144,1	L1	107,5
B1	45		
B2	99,1		
F	1"1/2		
H	91		
L	180		

Weight : 2,22 kg

Pump connection

Suction side :	1 " 1/2 G
Discharge side :	1 " 1/2 G

DAB PUMPS reserves the right to make modifications without notice

PERFORMANCE CURVES

2024-11-05

DAB PUMPS S.p.A.
Via Marco Polo, 14 - 35035 Mestrino (PD), Italy
Tel. +39 049 5125000 - Fax +39 049 5125950
www.dabpumps.com

	Receiver	From
Company		
Reference		
Address		
Phone		
Fax		
E-mail		

EVOSTA3 80/180

Curve tolerance according to ISO 9906

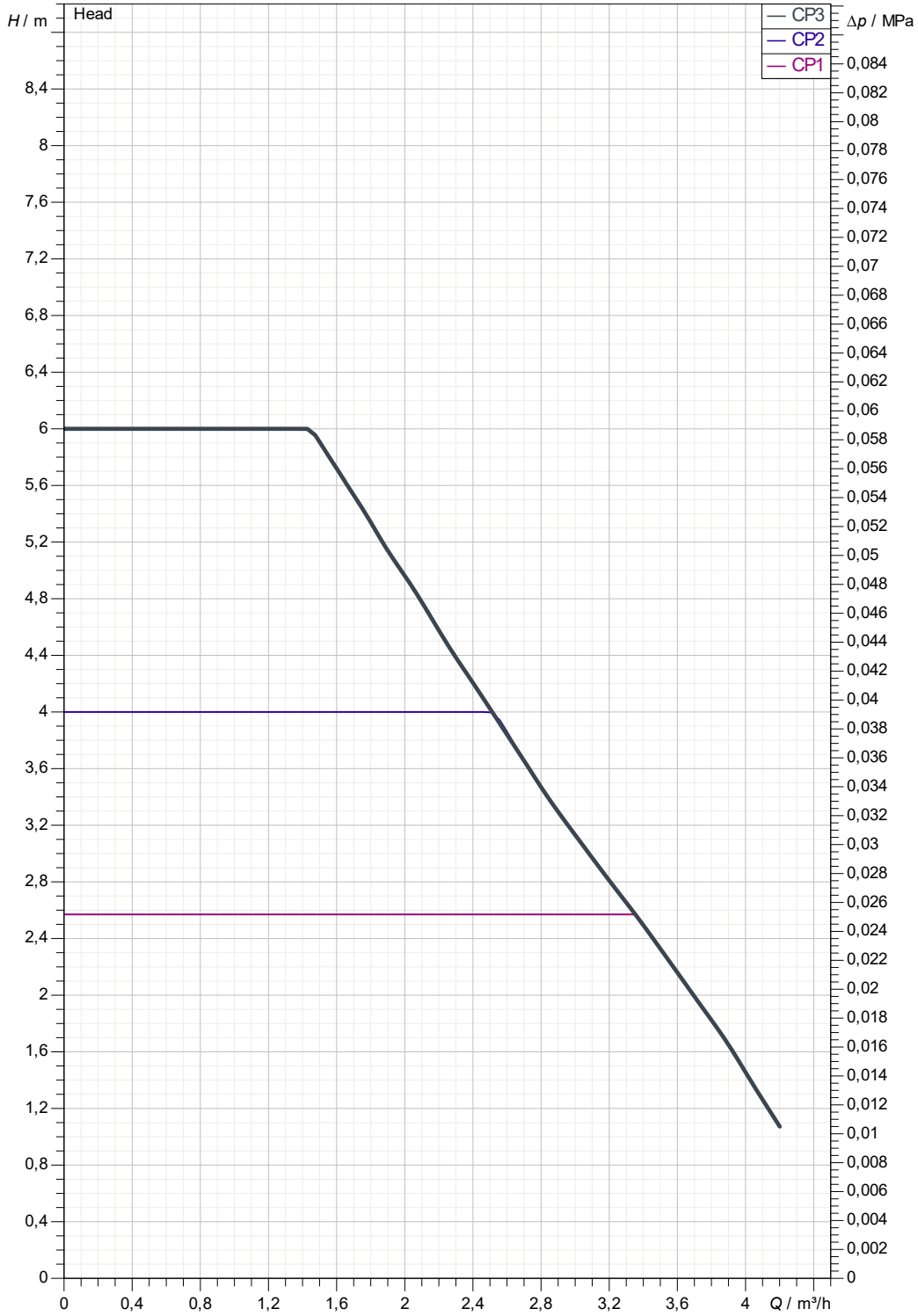

Hydraulic data (dutypoint)

Suction side :	Discharge side :	Flow :	Head :	Rated speed :
1 " 1/2 G 1 MPa	1 " 1/2 G 1 MPa			2.900 1/min

Project	Project ID	Created by	Created on
			2024-11-05

DAB PUMPS reserves the right to make modifications without notice

DIMENSIONAL DRAWING

2024-11-05

DAB PUMPS S.p.A.
Via Marco Polo, 14 - 35035 Mestrino (PD), Italy
Tel. +39 049 5125000 - Fax +39 049 5125950
www.dabpumps.com

	Receiver	From
Company Reference Address Phone Fax E-mail		

EVOSTA3 80/180

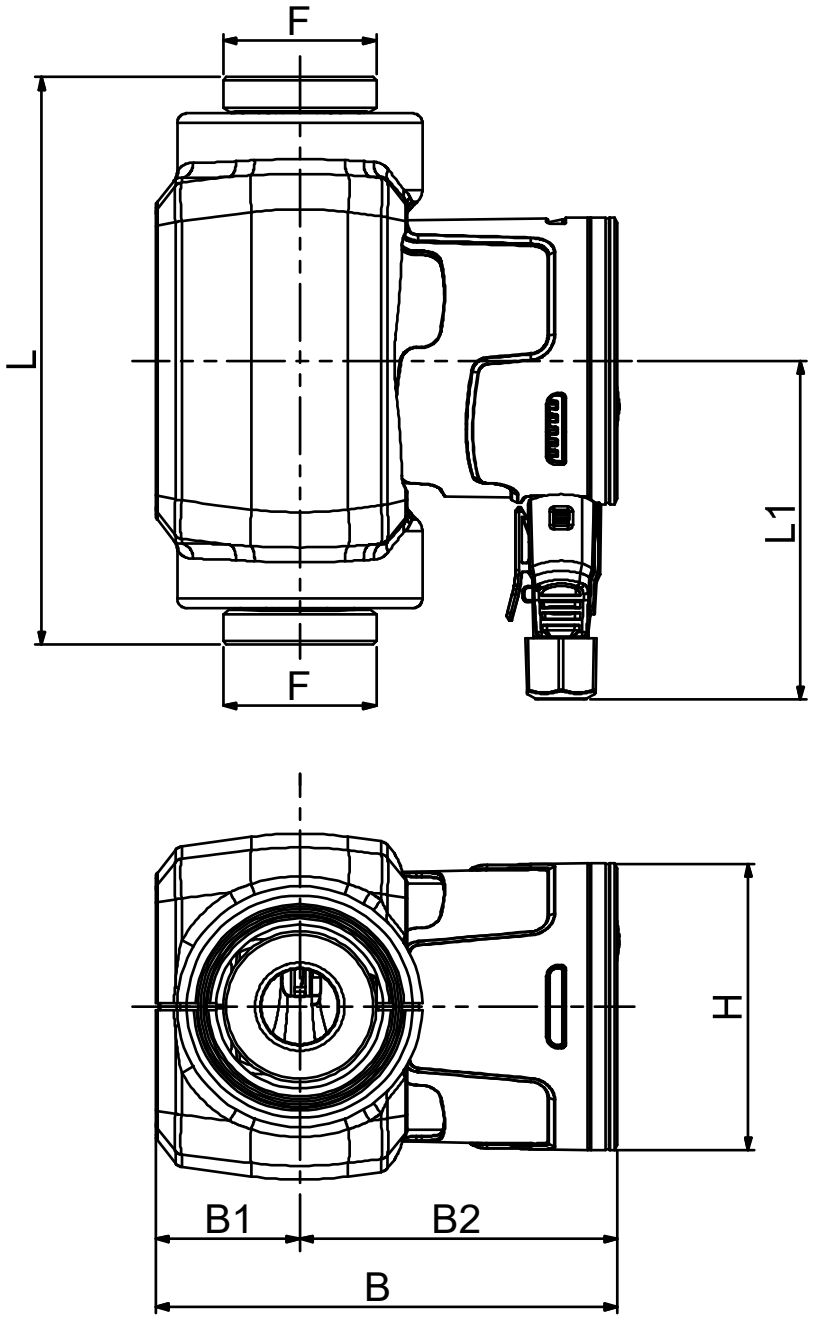

	Dimensions in mm						Pump connection
1	B	144,1					
2	B1	45					Suction
3	B2	99,1					1 " 1/2 G
4	F	1"1/2					1 MPa
5	H	91					
6	L	180					
7	L1	107,5					Discharge
8							1 " 1/2 G
9							1 MPa
10							
11							

Project	Project ID	Created by	Created on
			2024-11-05

DAB PUMPS reserves the right to make modifications without notice