DATA SHEET

2024-11-05

DAB PUMPS S.p.A.
Via Marco Polo, 14 - 35035 Mestrino (PD), Italy
Tel. +39 049 5125000 - Fax +39 049 5125950
www.dabpumps.com

Receiver	From
Company	
Reference	
Address	
Phone	
Fax	
E-mail	

Item n° : 60150952

Customer pos. no.:

Model :

EVOPLUS B 80/250.40 M

Pump data

Pressure rating :	1,6 MPa
Min. fluid temperature :	-10 °C
Max. fluid temperature :	110 °C
EEI :	≤ 0,20

Minimun suction head :

Temperature	°C	90	100
Minimun suction head :	m	20	25

Requested data

Flow :	
Head :	
Fluid (%) :	
Fluid Temperature :	20 °C
Density :	998,3 kg/m³
Kinematic viscosity :	1,005 mm²/s
Vapor pressure :	0,00 MPa

Hydraulic data (duty point)

Flow :	
Head :	

Materials

Pump body	Cast iron 250 UNI ISO 185 - CTF
Impeller	Technopolymer
Motor shaft	Alumina
Seal ring	EPDM
Motor casing	Die cast aluminium
Closing flange	Stainless steel
Thrust ring support	EPDM

Curve tolerance according to ISO 9906

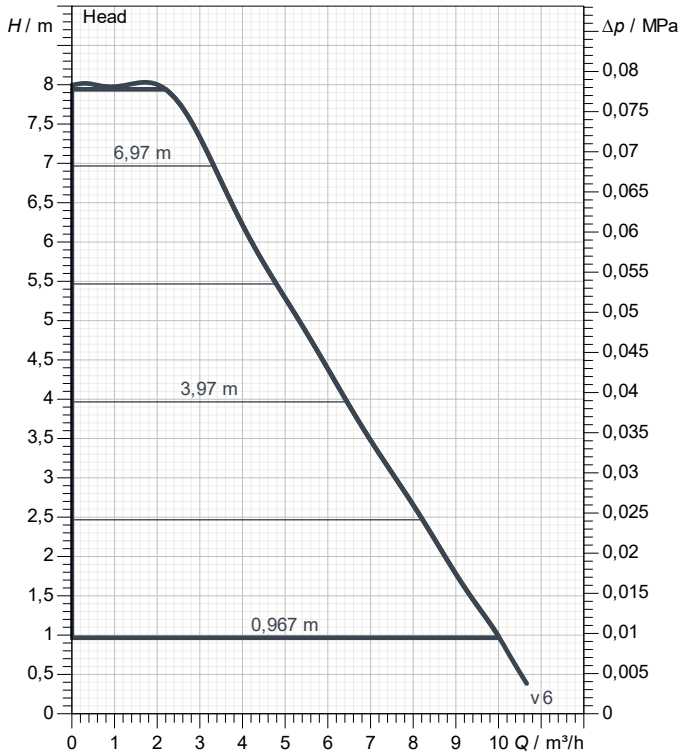

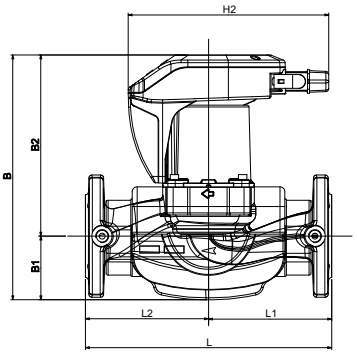

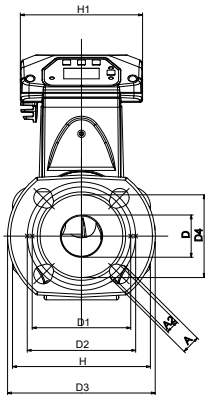

Motor data

Motor brand :	DAB		
Max. Power input P1 :	0,132 kW		
Rated voltage :	1~	220-240 V	50 Hz
Nominal current :	1,06 A		
Degree of protection :	IP 44		

Dimensions in mm

A	19	D1	100	H2	204		
A2	14	D2	110	L	250		
B	258	D3	150	L1	125		
B1	74	D4	84	L2	125		
B2	184	H	176				
D	43	H1	124				

Weight : 7,5 kg

Pump connection

Suction side :	DN 40	/	PN6, PN10, PN16
Discharge side :	DN 40	/	PN6, PN10, PN16

DAB PUMPS reserves the right to make modifications without notice

PERFORMANCE CURVES

2024-11-05

DAB PUMPS S.p.A.
Via Marco Polo, 14 - 35035 Mestrino (PD), Italy
Tel. +39 049 5125000 - Fax +39 049 5125950
www.dabpumps.com

	Receiver	From
Company Reference Address Phone Fax E-mail		

EVOPLUS B 80/250.40 M

Curve tolerance according to ISO 9906

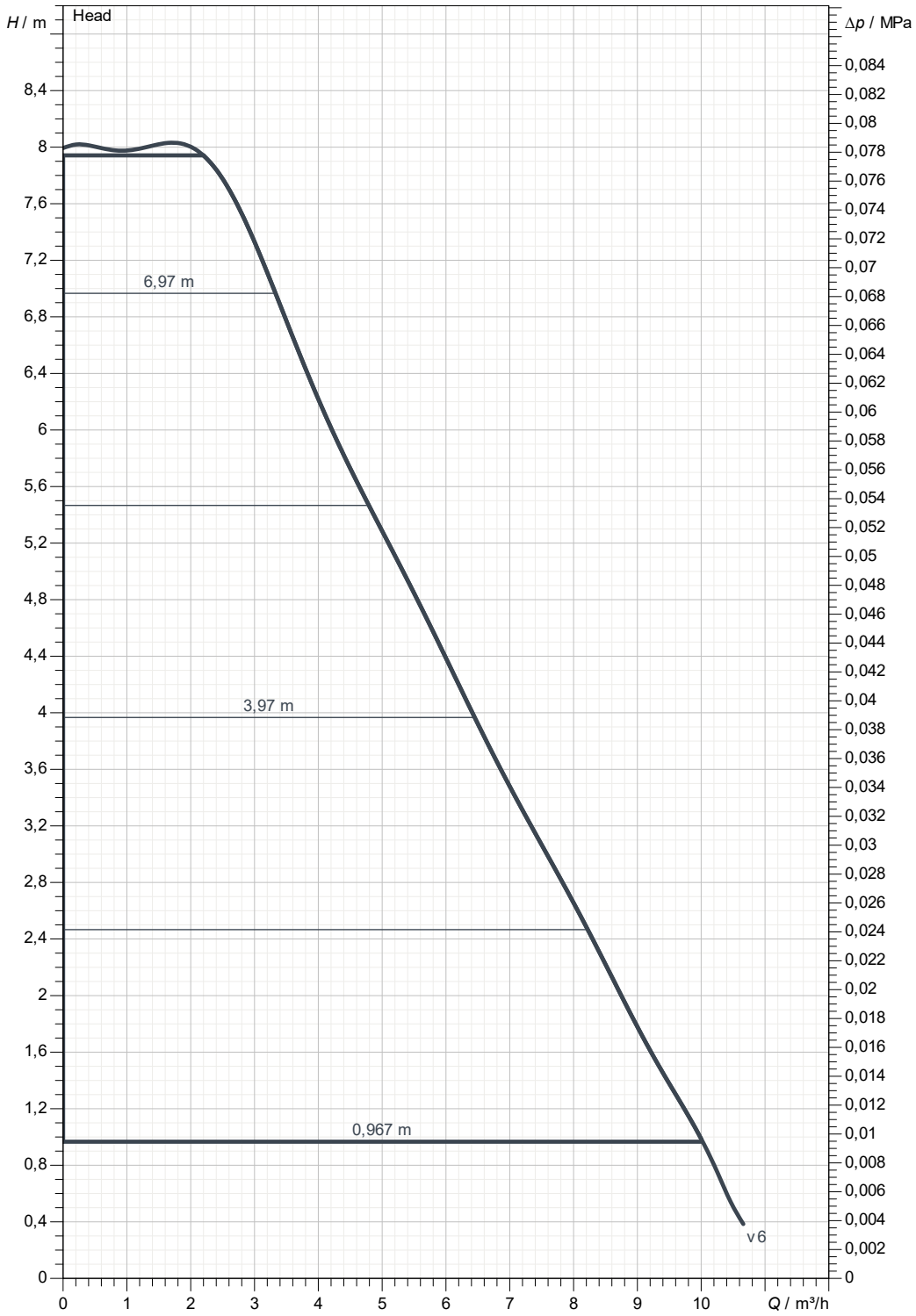

Hydraulic data (dutypoint)

Suction side :	Discharge side :	Flow :	Head :	Rated speed :
DN 40 PN6, PN10, PN16	DN 40 PN6, PN10, PN16			2.900 1/min

MAIN_PROJECT_TITLE	BUSINESS_PROCESS_ID	OWNER_	ISSUE_DATE
			2024-11-05

DAB PUMPS reserves the right to make modifications without notice

DIMENSIONAL DRAWING

2024-11-05

DAB PUMPS S.p.A.
Via Marco Polo, 14 - 35035 Mestrino (PD), Italy
Tel. +39 049 5125000 - Fax +39 049 5125950
www.dabpumps.com

	Receiver	From
Company Reference Address Phone Fax E-mail		

EVOPLUS B 80/250.40 M

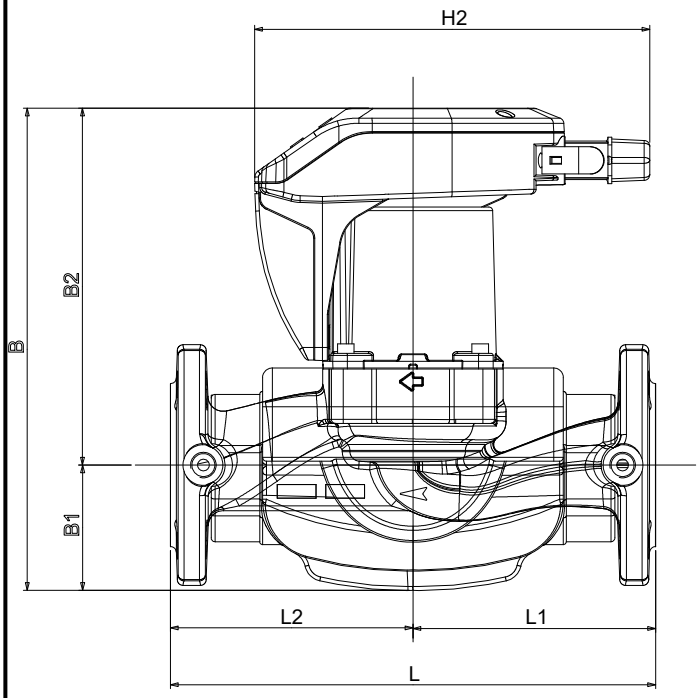

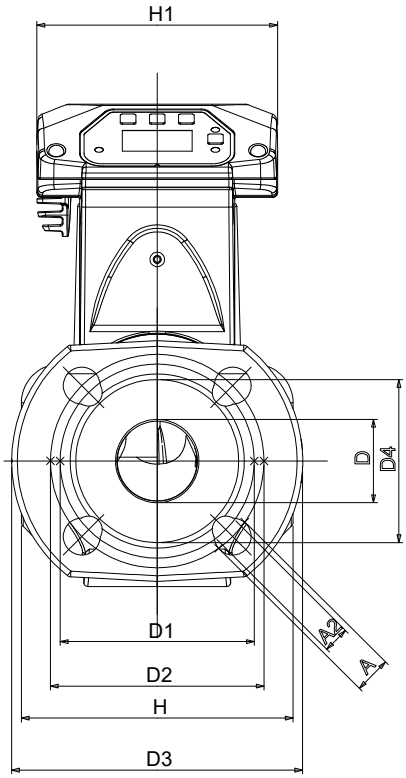

	Dimensions in mm						Pump connection
1	A	19	H1	124			
2	A2	14	H2	204			Suction
3	B	258	L	250			DN 40
4	B1	74	L1	125			PN6, PN10, PN16
5	B2	184	L2	125			
6	D	43					
7	D1	100					Discharge
8	D2	110					DN 40
9	D3	150					PN6, PN10, PN16
10	D4	84					
11	H	176					

MAIN_PROJECT_TITLE	BUSINESS_PROCESS_ID	OWNER_	ISSUE_DATE
			2024-11-05

DAB PUMPS reserves the right to make modifications without notice