DATA SHEET

2024-11-05

DAB PUMPS S.p.A.
Via Marco Polo, 14 - 35035 Mestrino (PD), Italy
Tel. +39 049 5125000 - Fax +39 049 5125950
www.dabpumps.com

Receiver

Company
Reference
Address
Phone
Fax
E-mail

From

Item n° : **Customer pos. no.:**

60150969

Model :

EVOPLUS B 180/250.40 M

Pump data

Pressure rating :	1,6 MPa
Min. fluid temperature :	-10 °C
Max. fluid temperature :	110 °C
EEI :	≤ 0,20

Minimun suction head :

Temperature	°C	90	100
Minimun suction head :	m	20	25

Requested data

Flow :	
Head :	
Fluid (%) :	
Fluid Temperature :	20 °C
Density :	998,3 kg/m³
Kinematic viscosity :	1,005 mm²/s
Vapor pressure :	0,00 MPa

Hydraulic data (duty point)

Flow :	
Head :	

Materials

Pump body	Cast iron 250 UNI ISO 185 - CTF
Impeller	Technopolymer
Motor shaft	Stainless steel
Seal ring	EPDM
Motor casing	Die cast aluminium
Closing flange	Stainless steel
Thrust ring support	Stainless steel

Curve tolerance according to ISO 9906

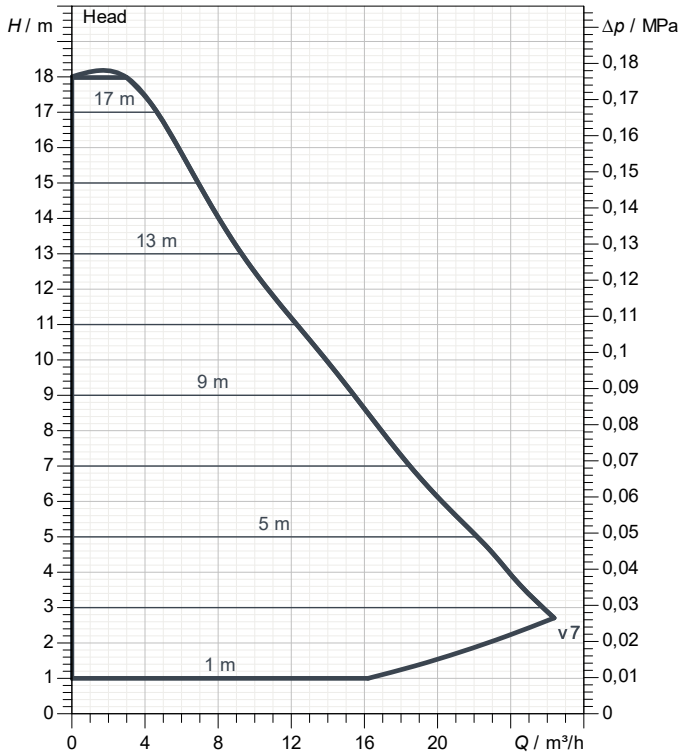

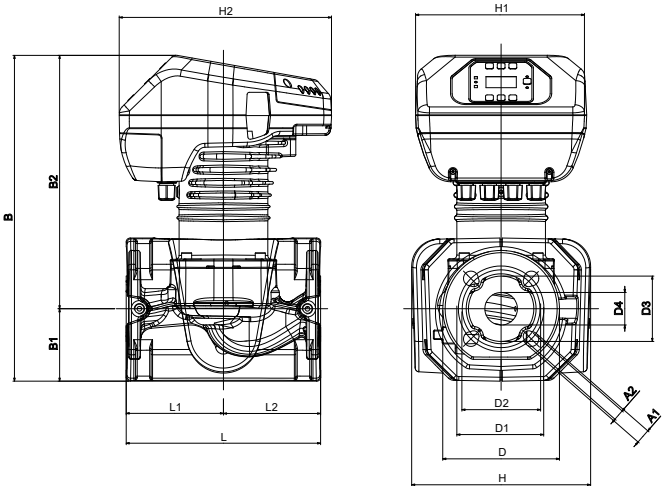

Motor data

Motor brand :	DAB		
Max. Power input P1 :	0,61 kW		
Rated voltage :	1~	220-240 V	50 Hz
Nominal current :	2,9 A		
Degree of protection :	IP 44		

Dimensions in **mm**

A1	19	D1	110	H2	273		
A2	14	D2	100	L	250		
B	419	D3	84	L1	125		
B1	93	D4	42	L2	125		
B2	326	H	230				
D	150	H1	220				

Weight : 20 kg

Pump connection

Suction side :	DN 40	/	PN6, PN10, PN16
Discharge side :	DN 40	/	PN6, PN10, PN16

DAB PUMPS reserves the right to make modifications without notice

PERFORMANCE CURVES

2024-11-05

DAB PUMPS S.p.A.
Via Marco Polo, 14 - 35035 Mestrino (PD), Italy
Tel. +39 049 5125000 - Fax +39 049 5125950
www.dabpumps.com

	Receiver	From
Company		
Reference		
Address		
Phone		
Fax		
E-mail		

EVOPLUS B 180/250.40 M

Curve tolerance according to ISO 9906

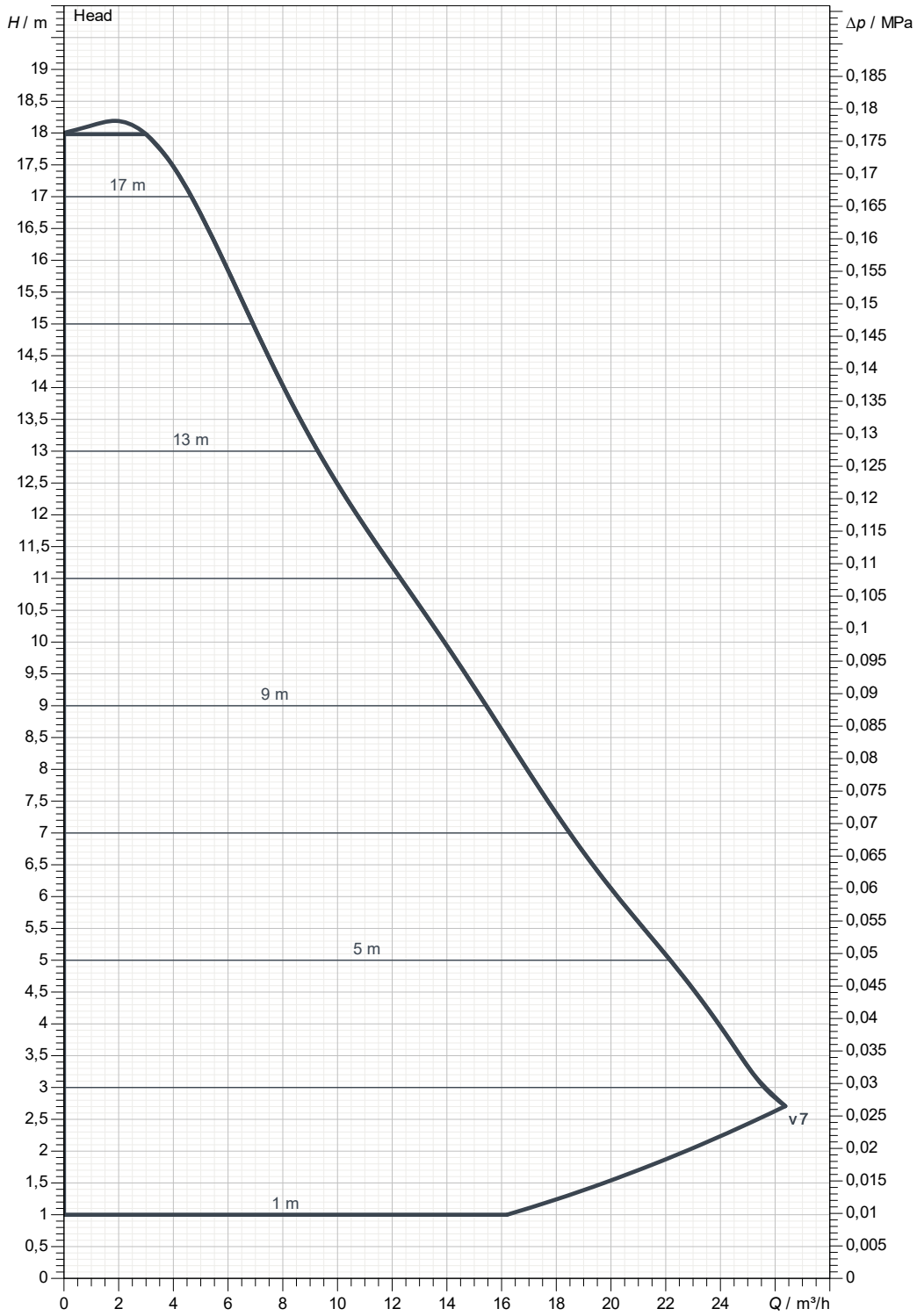

Hydraulic data (dutypoint)

Suction side :	Discharge side :	Flow :	Head :	Rated speed :
DN 40	DN 40			5.100 1/min
PN6, PN10, PN16	PN6, PN10, PN16			

MAIN_PROJECT_TITLE	BUSINESS_PROCESS_ID	OWNER_	ISSUE_DATE
			2024-11-05

DAB PUMPS reserves the right to make modifications without notice

DIMENSIONAL DRAWING

2024-11-05

DAB PUMPS S.p.A.
Via Marco Polo, 14 - 35035 Mestrino (PD), Italy
Tel. +39 049 5125000 - Fax +39 049 5125950
www.dabpumps.com

	Receiver	From
Company Reference Address Phone Fax E-mail		

EVOPLUS B 180/250.40 M

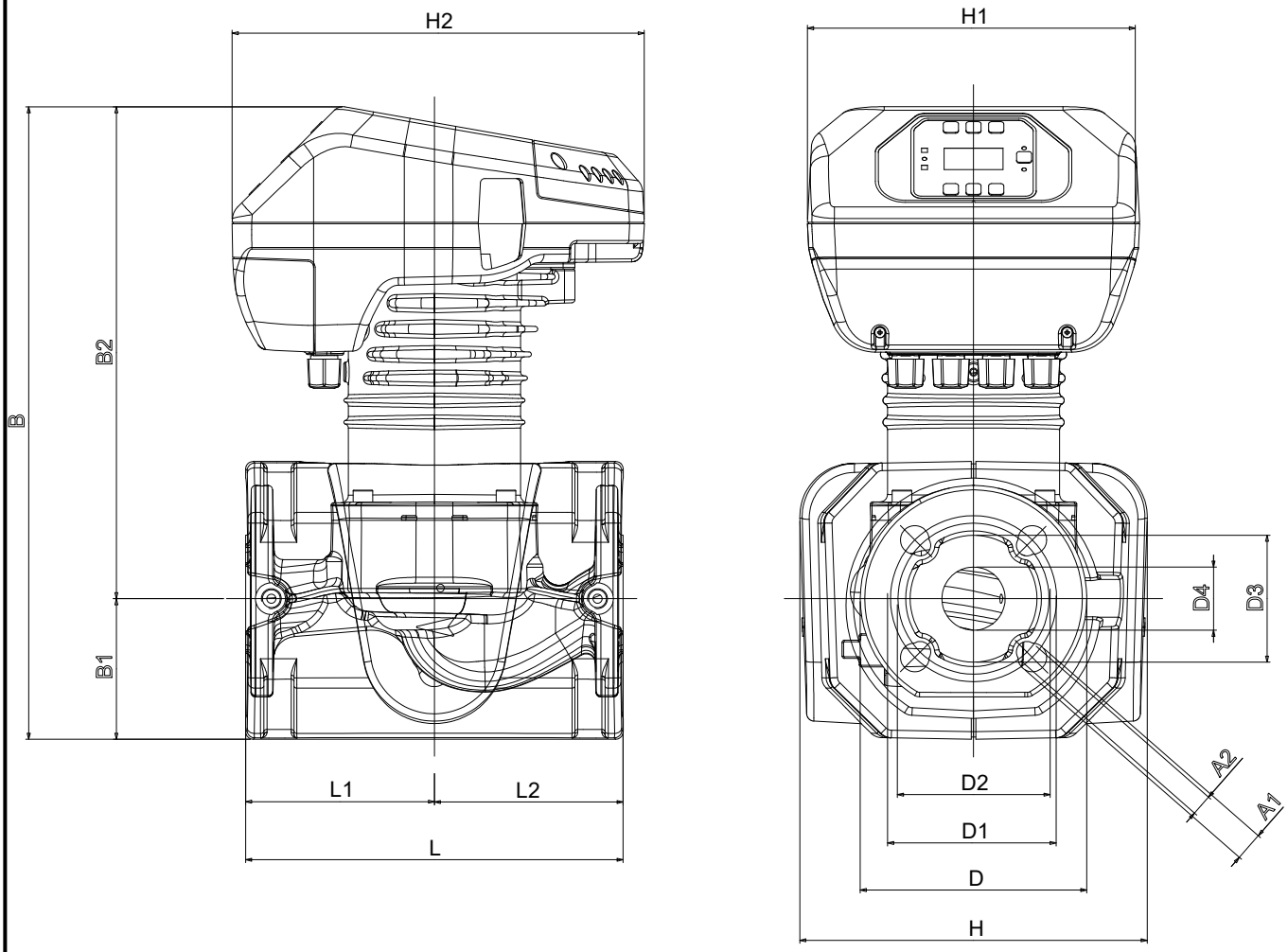

Dimensions in mm							Pump connection
1	A1	19	H1	220			
2	A2	14	H2	273			Suction
3	B	419	L	250			DN 40
4	B1	93	L1	125			PN6, PN10, PN16
5	B2	326	L2	125			
6	D	150					
7	D1	110					Discharge
8	D2	100					DN 40
9	D3	84					PN6, PN10, PN16
10	D4	42					
11	H	230					

MAIN_PROJECT_TITLE	BUSINESS_PROCESS_ID	OWNER_	ISSUE_DATE
			2024-11-05

DAB PUMPS reserves the right to make modifications without notice