DATA SHEET

2024-11-05

DAB PUMPS S.p.A.
Via Marco Polo, 14 - 35035 Mestrino (PD), Italy
Tel. +39 049 5125000 - Fax +39 049 5125950
www.dabpumps.com

Receiver

Company
Reference
Address
Phone
Fax
E-mail

From

Item n° : **Customer pos. no.:**

60151017

Model :

EVOPLUS D 80/340.65 M

Pump data

Pressure rating :	1,6 MPa
Min. fluid temperature :	-10 °C
Max. fluid temperature :	110 °C
EEI :	≤ 0,20

Minimun suction head :

Temperature	°C 90 - 100
Minimun suction head :	m 20 - 25

Requested data

Flow :	
Head :	
Fluid (%) :	
Fluid Temperature :	20 °C
Density :	998,3 kg/m³
Kinematic viscosity :	1,005 mm²/s
Vapor pressure :	0,00 MPa

Hydraulic data (duty point)

Flow :	
Head :	

Materials

Pump body	Cast iron 250 UNI ISO 185 - CTF
Impeller	Technopolymer
Motor shaft	Stainless steel
Seal ring	EPDM
Motor casing	Die cast aluminium
Closing flange	Stainless steel
Thrust ring support	Stainless steel

Curve tolerance according to ISO 9906

Number of working motors : 2

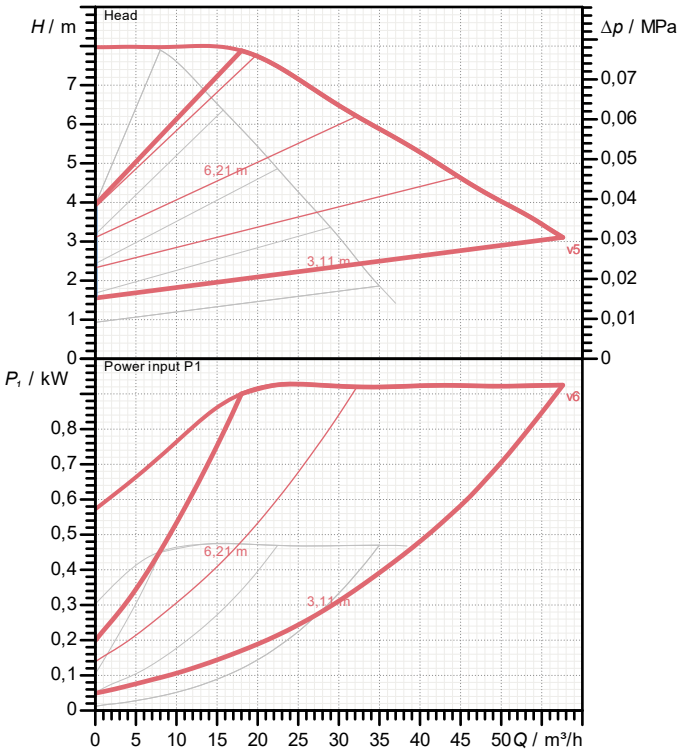

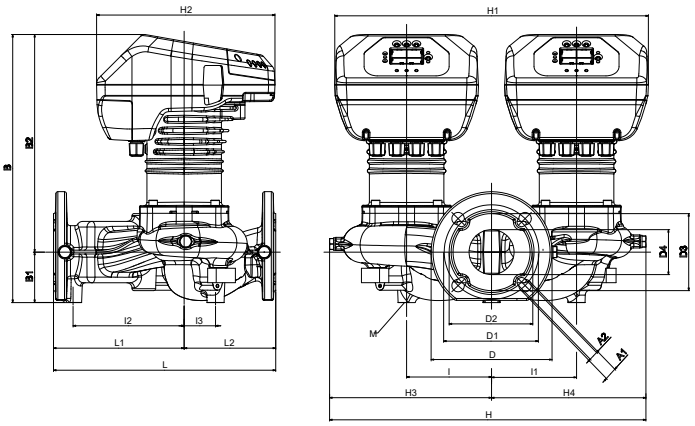

Motor data

Motor brand :	DAB	
Max. Power input P1 :	2 X 0,465 kW	
Rated voltage :	1~ 220-240 V	50 Hz
Nominal current :	2 X 2,2 A	
Degree of protection :	IP 44	

Dimensions in mm

A1	19	D1	145	H2	273	I3	48
A2	14	D2	130	H3	248	L	340
B	411	D3	118	H4	236	L1	200
B1	77	D4	69	I	130	L2	140
B2	334	H	484	I1	130	M	M12
D	185	H1	480	I2	170		

Weight : 43,4 kg

Pump connection

Suction side :	DN 65	/ PN6, PN10, PN16
Discharge side :	DN 65	/ PN6, PN10, PN16

DAB PUMPS reserves the right to make modifications without notice

PERFORMANCE CURVES

2024-11-05

DAB PUMPS S.p.A.
Via Marco Polo, 14 - 35035 Mestrino (PD), Italy
Tel. +39 049 5125000 - Fax +39 049 5125950
www.dabpumps.com

	Receiver	From
Company Reference Address Phone Fax E-mail		

EVOPLUS D 80/340.65 M

Number of working motors : 2

Curve tolerance according to ISO 9906

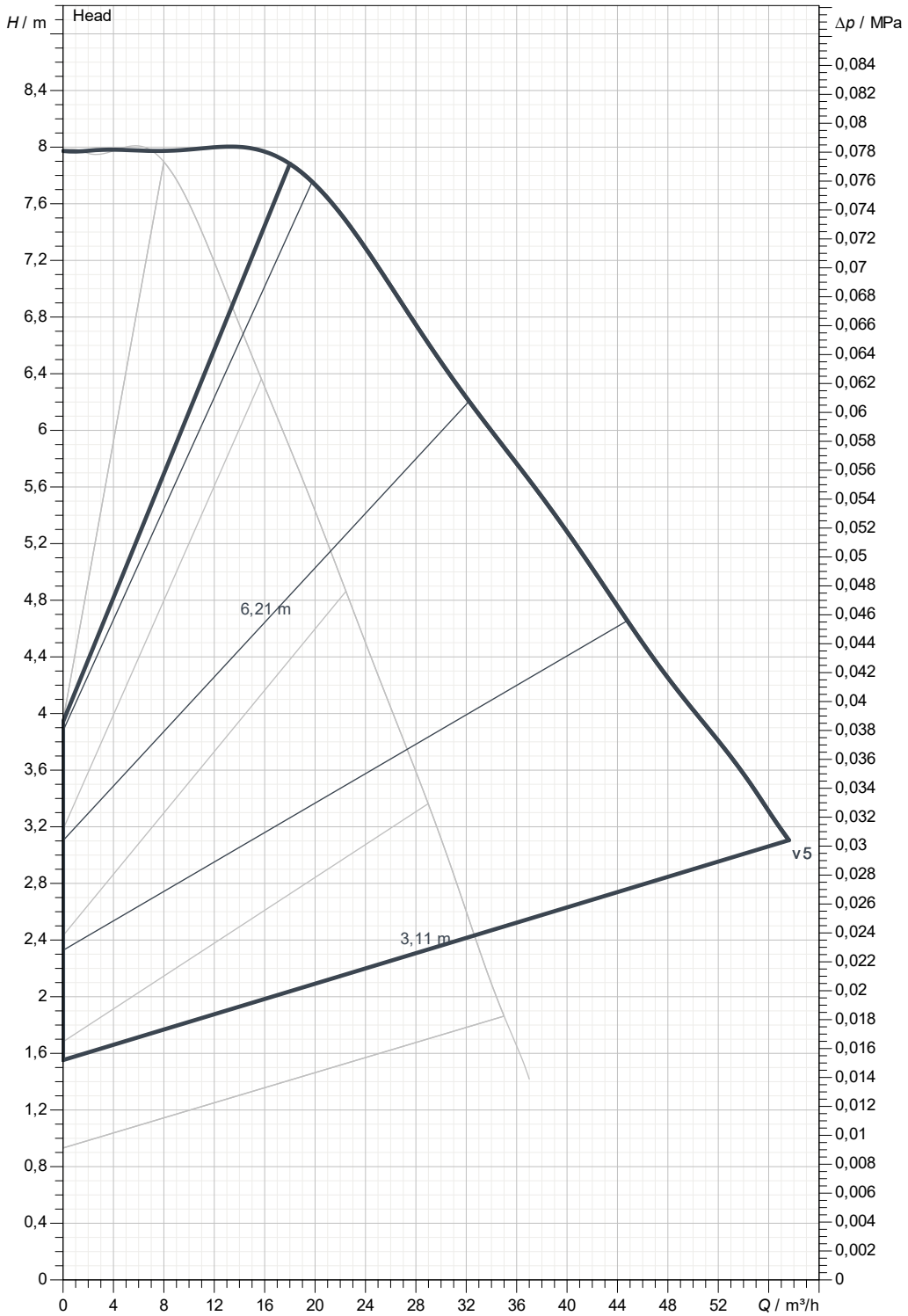

Hydraulic data (dutypoint)

Suction side :	Discharge side :	Flow :	Head :	Rated speed :
DN 65 PN6, PN10, PN16	DN 65 PN6, PN10, PN16			2.900 1/min

MAIN_PROJECT_TITLE	BUSINESS_PROCESS_ID	OWNER_	ISSUE_DATE
			2024-11-05

DAB PUMPS reserves the right to make modifications without notice

DIMENSIONAL DRAWING

2024-11-05

DAB PUMPS S.p.A.
Via Marco Polo, 14 - 35035 Mestrino (PD), Italy
Tel. +39 049 5125000 - Fax +39 049 5125950
www.dabpumps.com

	Receiver	From
Company Reference Address Phone Fax E-mail		

EVOPLUS D 80/340.65 M

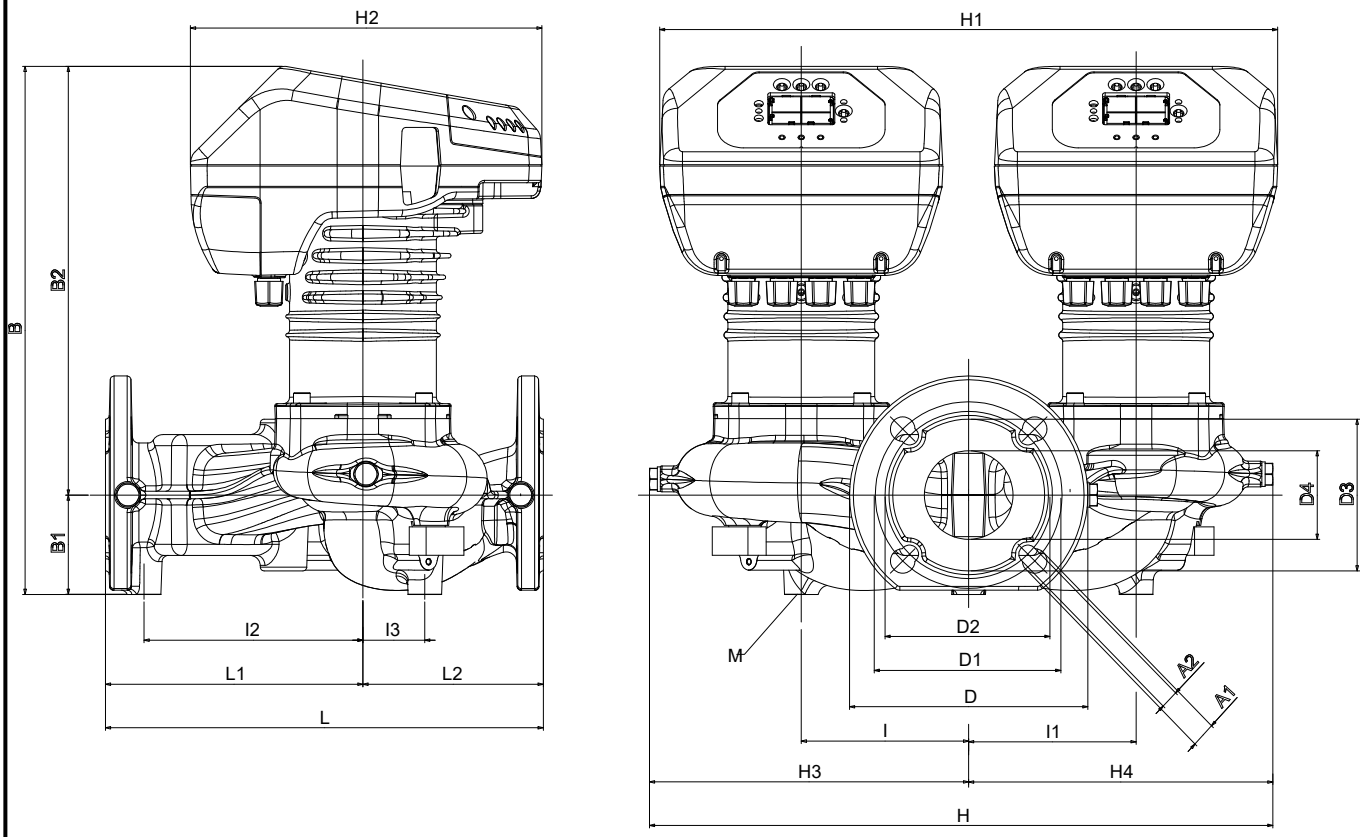

Dimensions in mm							Pump connection
1	A1	19	H1	480	M	M12	
2	A2	14	H2	273			Suction
3	B	411	H3	248			DN 65
4	B1	77	H4	236			PN6, PN10, PN16
5	B2	334	I	130			
6	D	185	I1	130			
7	D1	145	I2	170			Discharge
8	D2	130	I3	48			DN 65
9	D3	118	L	340			PN6, PN10, PN16
10	D4	69	L1	200			
11	H	484	L2	140			

MAIN_PROJECT_TITLE	BUSINESS_PROCESS_ID	OWNER_	ISSUE_DATE
			2024-11-05

DAB PUMPS reserves the right to make modifications without notice